TKH AIRPORT SOLUTIONS

Datasheet

Taxiway Edge Omni Light (TXE)

LED AGL

Airfield Ground Lighting

03-71031

V2.3

General

TKH Airport Solutions inset lights are efficient and high-performing LED lights, providing at least 50,000 hours of service life at full 6.6 A operation. The LED light fixtures have a simplified modular construction, consisting of five main components:

- Aluminum forging cover plate, with mechanical load capabilities exceeding FAA requirements
- Interchangeable LED light module
- Electronic driver board with housing
- Borosilicate glass prism
- Secondary cable in accordance with FAA or ICAO requirements

This means easy maintenance of the lights because of the reduction of the amount of spare parts.

All of our inset lights are also available as part of our CEDD® solution. Please note that the specifications of CEDD lights are different from this datasheet. Contact our team for more details.

Key features

- 8" outer diameter
- 4 mm height above surface
- Depth below flange: 35 mm
- Light outlet size Ø 80 mm
- Dust and water tightness: IP 68
- Overall lifetime* > 20 years
- Useful lamp life (LED) up to 50,000 h
- Chromaticity coordinates according to ICAO Annex 14, Vol. 1 or FAA AC 150/5345-46E
- Nominal current: 6.6 A (0 – 100 %)
- Power consumption (@6.6 A): 8 W
- U_{max}(100 %): 1.2 V
- U_{min}(0.1 %): 0.9 V
- Power factor > 95 % at nominal current
- Ambient temperature: -55 °C (-67 °F) / + 85 °C (+185 °F)
- Internal serial interface for diagnostics and parameterization
- Fail/open function (optional)
- Integrated single lamp control (optional with CEDD®)

*) Apart from wear parts

Standards

This fixture has been developed according to the following standards:

- ICAO Annex 14, Vol. 1 and Vol. 2
- FAA AC 150/5345-46E
- Engineering Brief No. 67D
- IEC TS 61827

© TKH Airport Solutions 2023. All rights reserved. All specifications subject to change without notice.

Variants

- Omnidirectional
- L-852T

Colors

- Blue

Light distributions

Blue

ICAO §5.3.18

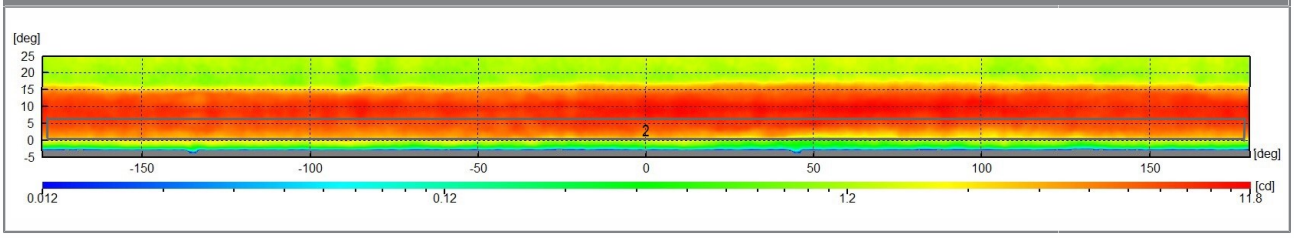

© TKH Airport Solutions 2023. All rights reserved. All specifications subject to change without notice.

Chromaticities

Areas description according to ICAO Annex 14, Volume I, Edition 8, July 2018

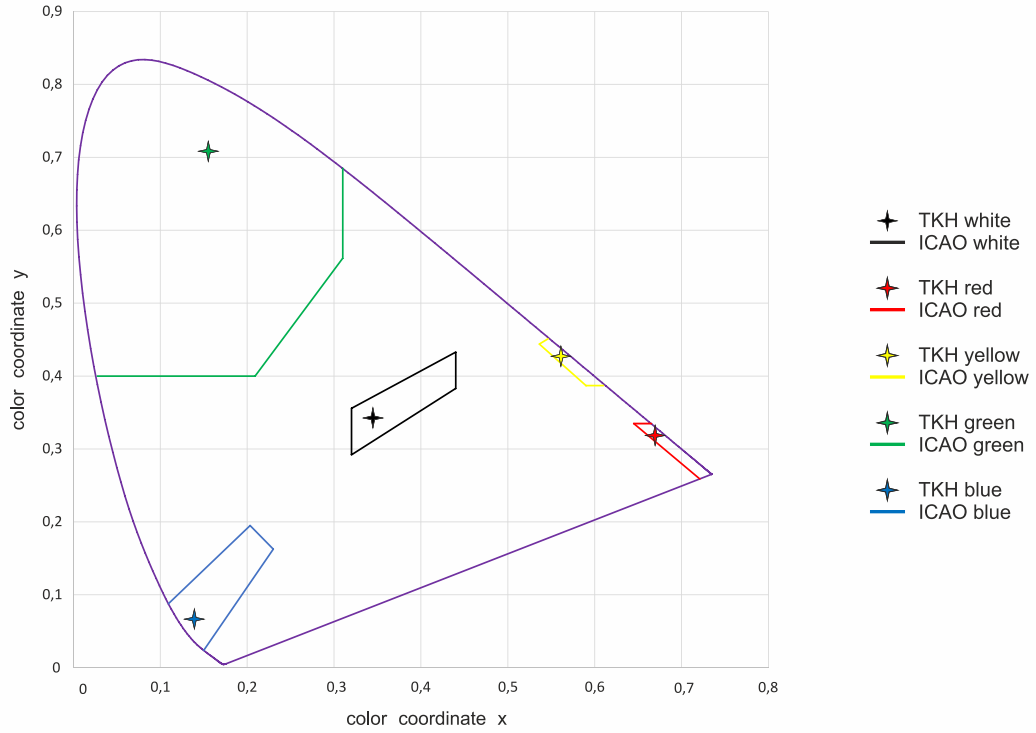

Dimensions (mm)

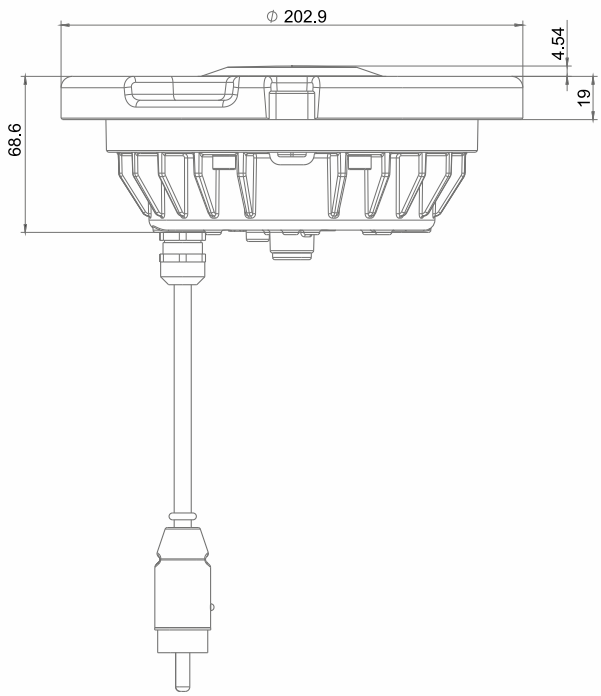

© TKH Airport Solutions 2023. All rights reserved. All specifications subject to change without notice.

Components

Omnidirectional

1. Cover (drop forged AL, anodized)
2. Sealing (Fluor silicate)
3. Prism (borosilicate glass)
4. High power LED module
5. Housing (Aluminum, die-cast)
6. FAA L-823 plug

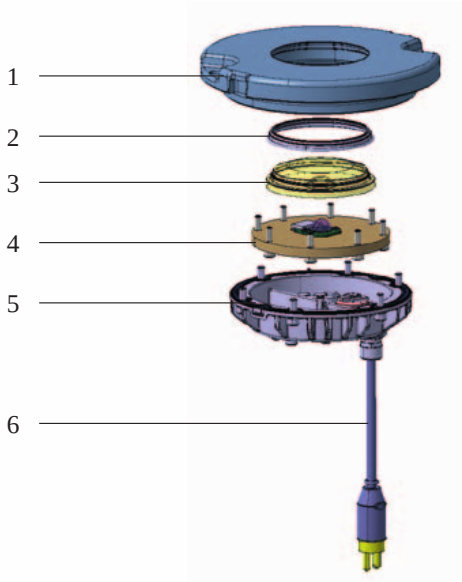

Accessories

- Transformer
- Shallow base

Please contact our sales team to know which accessories are required for your application.

Packing data

Variant	Dimensions (L x W x H) in mm	Gross weight in kg	Net weight in kg
8" Fixture	250 x 250 x 105	2.8	2.5
8" Shallow Base	215 x 215 x 130	2.7	2.5

© TKH Airport Solutions 2023. All rights reserved. All specifications subject to change without notice.

Document Information

Name	: 04_LED_Taxiway_Edge_Omni_Light_Type_TXE_03-71031
Version	: V2.3
Language	: English (Original manual)

For the latest version of this document see *https://www.tkh-airportsolutions.com/airfield-products/* or scan:

© TKH Airport Solutions 2023. All rights reserved. All specifications subject to change without notice.

Ordering code

TXE - O - I - 3 1 - B 00 0 00 - 1 - 1O - 1 0 0 0

Option	Key	Description
Version		
	TXE	Taxiway Edge Omni Light
Direction		
	O	Omni
Regulation		
	F	FAA
	I	ICAO
Light Intensity		
	1	CAT I
	2	CAT II
	3	CAT III
Cover/Size		
	1	8 Inch Cover
	3	8 Inch Flat Cover
Color A		
	B	Blue
Toe-in A		
	00	No Toe-In
Color B		
	0	Blank
Toe-in B		
	00	No Toe-In
Prism		
	1	Borosilicate Prism
Cable		
	1O	250mm One Plug
	2O	457mm One Plug
	3O	300mm One Plug
Plug type		
	1	Standard FAA 2-Pole-Plug
	2	Special 3-Pole-Plug
Fail-open		
	0	Without Fail-Open
	1	With Fail-Open Hardware Relais
	2	With Fail-Open Signal Interface
Deicing-Kit		
	0	Without De-icing
Special options		
	0	No Special Options

© TKH Airport Solutions 2023. All rights reserved. All specifications subject to change without notice.

Company profile:

TKH Airport Solutions is an innovator in airfield ground lighting, offering a complete range of LED AGL products. We build upon the know-how from a long and successful tradition of pioneering developments in the AGL and connectivity industry. Being part of the TKH Group, our company can build on a history of more than 90 years in smart connectivity, energy distribution and AGL.

More information:

TKH Airport Solutions
sales@tkh-airportsolutions.com
www.tkh-airportsolutions.com
+31 (0)53 57 414 56

Visiting address:

Elektrostraat 17
7483 PG Haaksbergen
The Netherlands