Regulator type CCR 961-SW4.00

USER MANUAL
GB

LIST OF CONTENT

1. General information

1.1 The layout of this manual

This manual includes technical information about the Hella Induperm range of Constant Current Regulators, CCR 961 with improved firmware, SW4.0xx.
The range of CCR's are constructed and manufactured of standard parts, mostly produced in-house. As the possible settings in the CCR's are numerous, it is advised to study the manual carefully before any settings are changed.
All standards settings and operations are detailed described in the Step-by-Step instruction in section 5.5.

1.2 The use of the manual

The manual is intended to be used for installation, operation, maintenance of the CCR, as well as for purchase of spare parts.

1.3 Manufacturer information

The CCR 961 are developed and manufactured by:

HELLA INDUPERM A/S
Københavnsvej 1
DK-4800 Nykøbing Falster
DENMARK

Tel.: +45 5486 0200
Fax.: +45 5486 0389
E-mail: induperm@induperm.dk
Homepage: www.induperm.dk or www.hella.com/airportlighting

1.4 Document information

Version	Date	Author	Approved
A –First release	2015.3.28	Ole Lund-Hermansen	OLH

Version	Date	Author	Approved	Comments
B	2015.5.12	OLH	OLH	SW Version 4.00c included
B1	2015.5.26	OLH	OLH	Optional remote terminals added
B2	2015.9.10	OLH	OLH	New drwg. for Remote control terminals

This manual includes a number of safety instructions, but national instructions as well as IEC 61820, Annex C, must be observed.

2 Overall CCR 961 information

2.1 Relevant standards

The range CCR 961 is constructed, manufactured and tested to meet the latest EN IEC 61822 standard.
The performance of the CCR 961 has been verified in tests performed by TÜV SÜD in Germany.
The range of CCR961 meets the requirements in ICAO Annex 14, as well as ICAO Design Manual

2.2 Main data

The CCR 961 in FAA layout is a complete unit including CCR Thyristor module for 40A, 60A or 110A, built together with output transformer and all belonging hardware such as measuring transformers, Isolation Measuring equipment and lightning protection devices.

Standard power ratings from 2,2 KVA to 35 KVA.
Standard 100% series circuit current can be selected in the SW between 2,2A / 6,6A and 13,2A (However, measuring transformer must be changed as well), but we can supply 8,3A – 10A – and 20A versions as well.
Standard input voltages are 230V / 400V (± 10%) - 50Hz or 60Hz (± 2 Hz)

Features

- Seven individual adjustable intensity steps.
- Earth fault supervision with two alarm levels.
- Lamp supervision with two alarm levels.
- Hour meters for 100% intensity and total time.
- All CCR adjustment stored on changeable Memory board for easy and fast maintenance
- Digital display showing:
  - Output current (RMS value).
  - Output voltage (RMS value).
  - Input voltage.
  - Time/date through build-in watch.
  - Power output.
  - Impedance to earth.
  - Number of faulty lamps

Mechanical specifications:

	Height (mm)	Depth (mm)	Width (mm)	App. Weight (KG)
CCR for 230V, Power rating ≤ 10 KVA	1666	600	390	175 – 240
CCR for 400V, Power rating ≤ 20 KVA	1666	600	390	175 – 275
CCR for 230V, Power rating > 10 KVA	1666	600	772	240 – 325
CCR for 400V, Power rating > 20 KVA	1666	600	772	275 – 325

Other specifications:
Max room temperature: 50 °C
Humidity, max: 95% (not condensing)
Efficiency:

- 230V supply 94 - 97%
- 400V supply 95 – 98%

Power factor better than 0,9 at full load (ohmish)

Cubicle is electro-plated and coated in light grey RAL 7035).

2.3 CCR 961 variants

a. Input voltage

CCR 961 can be supplied for almost all values of input voltages. However, our standards are 230VAC and 400VAC, 50Hz. The 400VAC version are preferred due to higher efficiency, and will be supplied if no specific requirement are stated.
The CCR modules can be supplied in three different max. current ratings, 40A - 60A and 110A. All three types can be set up for 230VAC use or 400VAC, simply by changing a terminal connection in the modules.
The 40A and 60A module are mechanical identical, which means that the 60A module can be used as spare for the 40A type. The 110A module is 2 times wider as the other modules.

b. Firmware

The CCR modules with the last Firmware (program), SW4.0xx covers:

- ISO measuring version 1 (standard offered type):
  ISO measuring in intervals (0-2,5KΩ, …, 1-2MΩ, > 2MΩ)
- ISO measuring version 2 (requires special measuring box):
  Measuring of ISO value from 5KΩ to >50MΩ, with high accuracy and two significant digits.
- Series circuit current nominal 6,6A (current measuring transformer 6,6/0,25A)
- Series circuit current nominal 2,2A (current measuring transformer 2,2/0,25A)
- Series circuit current nominal 13,2A (current measuring transformer 13,2/0,25A)

All SW version can be supplied for a number of different languages. The Danish and English language are always included, but the third language can be selected:

Last digit	1	2	3	4	5	6	7
Language (Country code)	D	F	N	S	P	I	

c. ISO measuring

As mentioned under Firmware, the CCR can be with the standard ISO measuring in intervals or the more expensive explicit measurement where the isolation value can be displayed from zero to more than 50MΩ with two significant digits, fx. 37MΩ. Besides the different setting in the SW, the explicit measurement system requires a more complicated Earth Measuring Box.

d. Cut-out device.

As standard, the CCR961 regulators are with Cut-out device based on FAA plugs as shown on drawing XXX: This Cut-out devise is placed behind the front door. The construction is simple and reliable, and gives easy access to measurements on the circuit while disconnected from the CCR.

Alternatively, the CCR can be supplied with a key operated Cut-off device, which can be operated without opening the front door on the CCR cubicle. This solution is specially designed in cases where the CCR must be operated and maintained by people without any technical education.
Both solutions are described in section 7.

e. Tapping on output transformer.
Dependent on date of construction and power rating, the Hella Induperm range of output transformers can be with tappings in steps of 7% or 10%.
All transformers are with two secondary coils, and for 7% tapping each coil have four terminals, while for 10% tappings the coils have only three terminals.
Most wiring diagrams shows both alternatives and the tapping must be based on the actual output transformer type. Tapping procedure is described in section 5.3.13.

2.4 Warranty limitations
The manufacturer or his representative cannot be held responsible for failures and malfunctions, if the instructions in this manual are not followed.
The CCR 961 will meet all specifications when installed and operated as specified.
Hella Induperm A/S only has responsibility to replace faulty parts if construction, production or component failure is proven.

3 CCR DESCRIPTION

3.1 General Information
Hella Induperm Constant Current Regulator type CCR 961 is developed specially for the supply of power to lighting systems in airports with their special demands for safety, reliability, accuracy and easy maintenance.
CCR 961 is designed for lighting systems built up as series circuits.
Hella Induperm CCR type 961 is constructed based on the latest experience and expertise within the field of power electronics, just as a number of µ-processors are used in each CCR.
This results in a very compact construction, large number of facilities and easy adaptation to any special requirement.
The Block Diagram 961.010 shows the principles in the CCR layout.

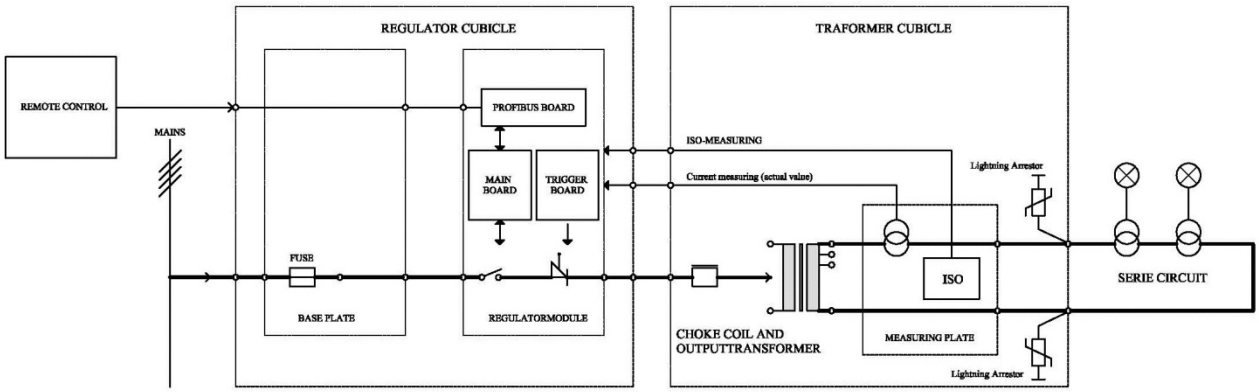

Block Diagram 961.010

<u>The basic working principles can be described as follows:</u>
Mains (one or two phases) are supplied to the CCR Module via MCB's (fuses) in the CCR cubicle. Through the contactor the Mains is connected to the thyristors. Each thyristor will lead a variable part of each half wave through to the Power Transformer (Thyristor working principle, see drawing 951.015).

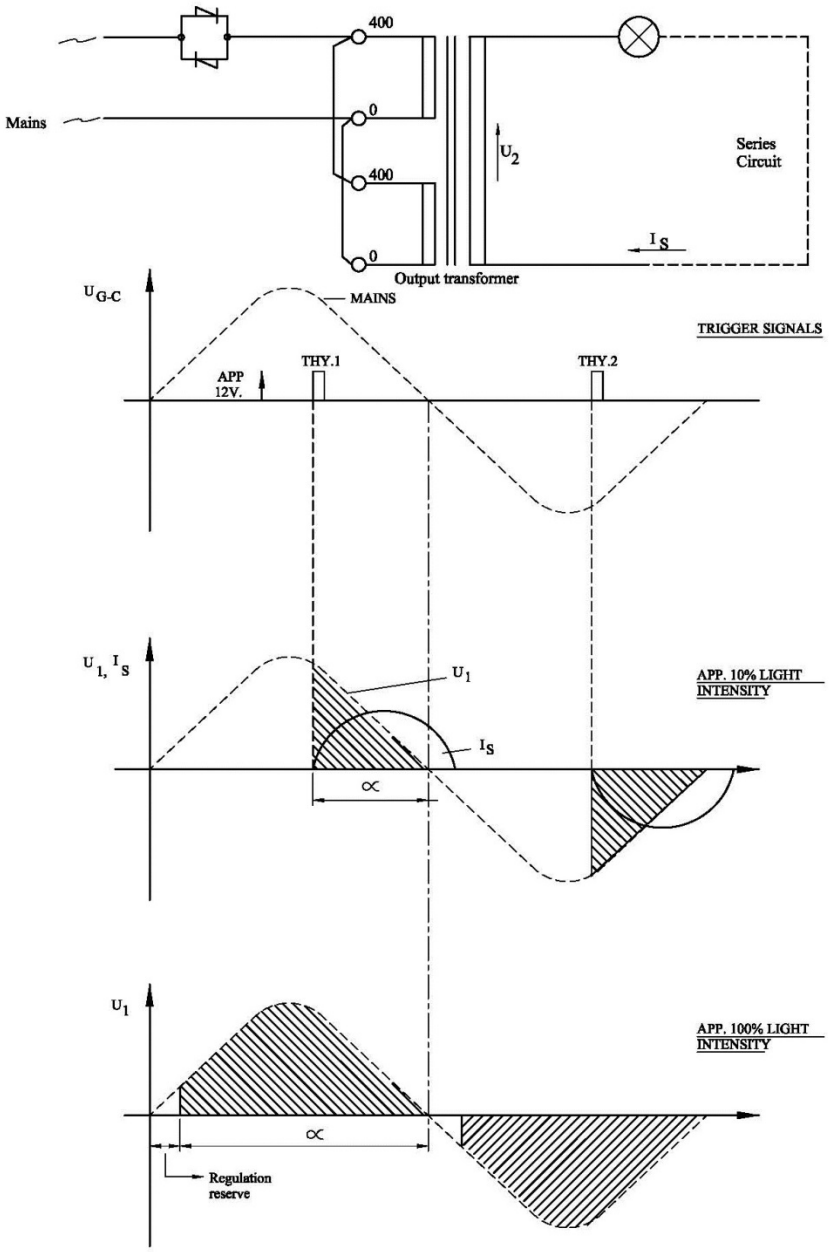

Thyristor Working Principle
951.015

The resulting input voltage on the primary side of the Power Transformer generates a certain output voltage (given by the voltage ration for the Power Transformer) to the series circuit.
This output voltage generates a current in the series circuit corresponding to the impedance in the series circuit.
The current transformer measures the value of the current in the series circuit and the measuring signal is send back to the CCR Module. In the CCR Module, the RMS value of the current is calculated, and a control is performed to see whether the current have a value corresponding to the requested value (our Reference Value). If that is not the case, the electronics will chance the time for triggering the thyristors in each half wave until the current have the correct value.

3.2 CCR Module (Standard)

The modules are manufactured in three sizes, 40A, 60A and 110A.
The CCR Modules are constructed as plug-in units with connectors for easy maintenance.
The CCR Modules includes up to three printed circuit boards (Mainboard, Trigger board and Profibus board), thyristor block, contactor, EMC components and fuses.
These elements are the main components in the CCR Modules.
On the front of the CCR Module, you will find:

- Key switch (Remote – Off – Local)
- Folia push bottoms
- Display
- LED indications
- Data connection

Each CCR Modules includes a Memory board. This Memory board includes a set of standard values for the adjustment of the CCR (Default Values). The Memory board do also include all individual adjustment for the CCR Module, as well as specific data for the connected series circuit.
If this Memory board is removed from one CCR Module to another, all data are moved accordingly. The Memory board is placed in a socket on the Mainboard printed circuit.
This facility means that a spare CCR can be taken in operation, fully adjusted, in a few minutes.

<u>Drawing 961.048 shows a block diagram of the CCR Module.</u>
All communication internally are done via an I2C data buss. On the Mainboard is placed two µ - processors. These processors are handling the current regulation, supervision as well as communication with the front panel (Local operation) or with the Remote Control. The Main Board includes facilities for directly remote control in our RS485 serial protocol. If Profibus is required, an additional Profibus board is included in the Module.
The following information can be added to the each single part (block) on drawing 961.048:

- The Current Reference system.
  As standard, the CCR has seven “normal” light intensity steps. These steps can all be adjusted to any current value between 2,2A and 6,6A.
  Besides, the CCR has a special step 8 (SW version 2.14y or later), designed for special purposes, such as
  - Heating of lamps / fixtures without any light output
  - Interlock current step, or a “safe” current value. The step can be used in connection with for instance large load changes.
  - Particular critical circuits can be permanent supervised for lamp- or isolation failures without lighting the circuit.
  - For Stopbarre circuits frequently switched on and off, to reduce number of contactor operations.
- The Analogue measuring system:
  The following analogue values are converted to digital data:
  - The current in the series circuit (0 – 6,6A via current transformer 7,5A/0,25A)
  - Mains (230V or 400V via voltage transformer 400V/10V)
  - Output voltage (0 – 5000V, measured on the primary side of the Power transformer via voltage transformer 400/10V, multiplicated with the voltage ration of the Power transformer)
  - The isolation level of the series circuit to ground, measured from 0 Ω to more than 2MΩ via ISO measuring box with 500VDC measuring voltage.

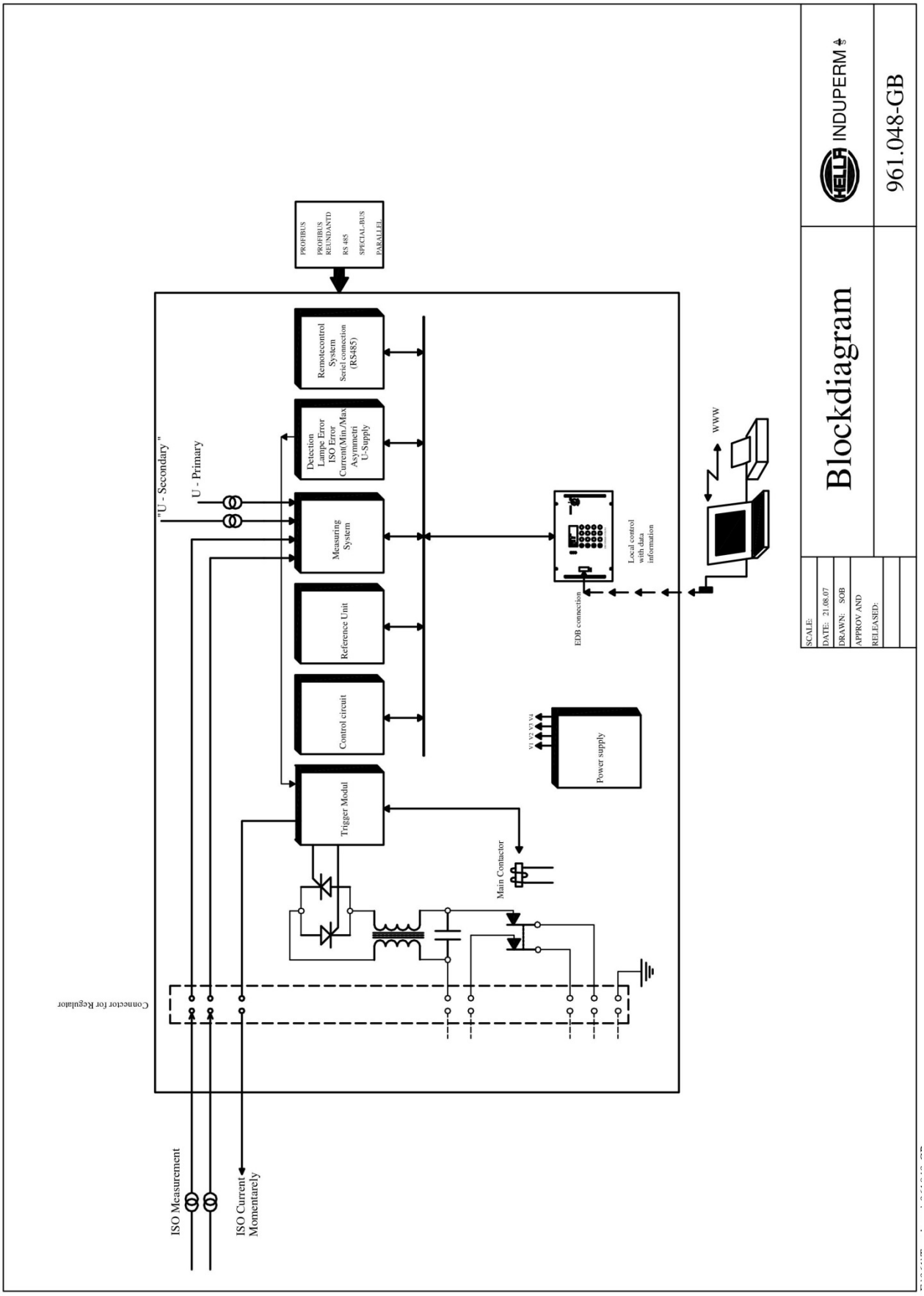
PROFIBUS
PROFIBUS REUNDANTD
RS 485
SPECIAL-BUS
PARALLEL
Remotecontrol System Serel connection (RS485)
Detection Lampe Error ISO Error Current(Min./Max Asymmetri U-Supply
Measuring System
Reference Unit
Control circuit
Trigger Modul
"U - Secondary"
U - Primary
Connector for Regulator
ISO Measurement
ISO Current Momentarely
Main Contactor
V1 V2 V3 V4
Power supply
EDB connection
Local control with data information
WWW
Blockdiagram
INDUPERM
961.048-GB
SCALE:
DATE: 21.08.07
DRAWN: SOB
APPROV AND
RELEASED:

- The Supervision system
  A number of vital parameters are constantly supervised, and one or two alarms can be generated for each of the following parameters.
  - Current in the series circuit:
    If the current drops below a certain (adjustable) limit, the series circuit must be open. This is dangerous for the maintenance people, and therefore the CCR are switched-off and an I-min alarm is displayed in the menu and send to the remote control system.
    If the current exceeds a certain (adjustable) limit, a CCR failure is properly at hand. This is dangerous for the lamps, and therefore the CCR is switched-off and an I-max is displayed in the menu and send to the remote control system.

  - Isolation failure:
    The CCR can be programmed to continuously ISO measurement or to interval measurements. By interval measurements, the interval between the measurements can be adjusted between 1 to 99 hours.
    A measuring voltage (500VDC) is connected between the series circuit and ground through a special measuring box. The resulting DC current can be used to calculate the isolation level. Isolation values between 0Ω and 2MΩ are displayed in 11 bands (fx. 50KΩ - 100KΩ). Two alarm levels can be set.

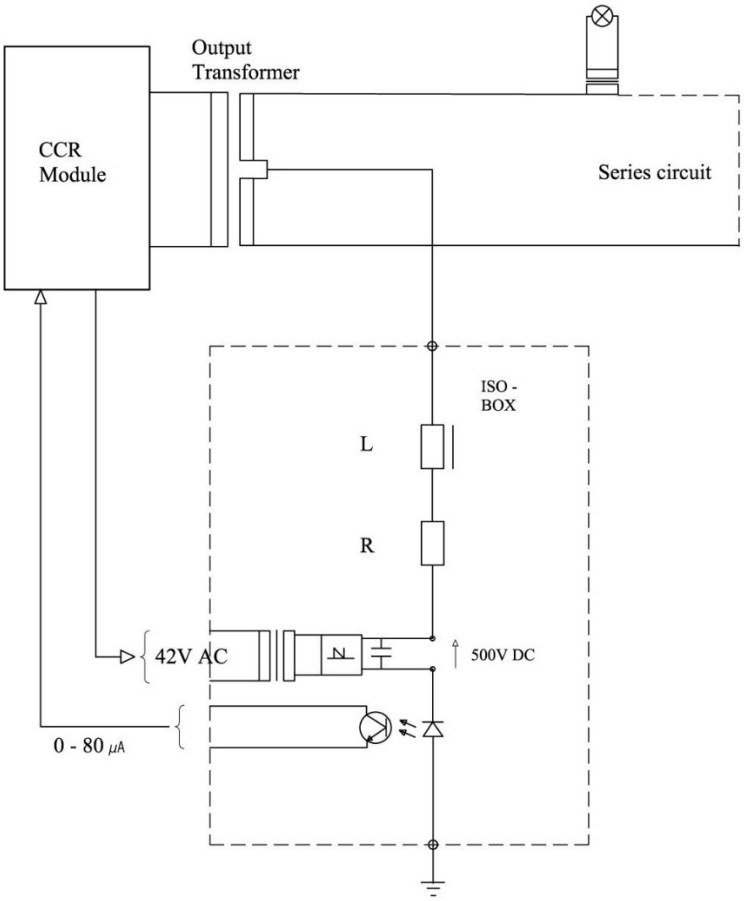

ISO Measuring principle

- Lamp failure:
  The principle behind the Hella Induperm LAME (**L**ampen **A**usfall **ME**ldung) system is based on the physical phenomenon, that when a lamp in the series circuit is faulty, the belonging isolating transformer will go in and out of saturation. Just after the activation of the thyristors in each half wave, or just before the current goes to zero again, the isolation transformer impedance will be very large. In the rest of each half wave, the isolation transformer impedance will be almost zero. By measuring the di/dt of the current around zero, the number of faulty lamps in the series circuit can be calculated.
  The CCR have a built-in Learn Mode for the adjustment of the LAME system. The number of faulty lamps can be detected up to 20 lamps with a very high accuracy. Two alarm levels can be set.

- The regulation circuit.
  In the regulation circuit, the actual current value is constantly compared with the requested current value (the Reference value). Based on the comparison it is determinated when the thyristor can be activated in each half wave.
  When using a larger part of the half wave a larger part of the Mains will be activated, and a larger current in the series circuit can be expected.
  The regulation is controlled by a µ-processor. The processor has divided each half wave in 500 steps. When turned on, the µ-processor will start in step 0, and by means of the built-in soft start facility, the current will slowly be regulated to the selected reference value. When the current is within +/- 0,5A from the reference value, the current is slowly regulated to match the reference value.

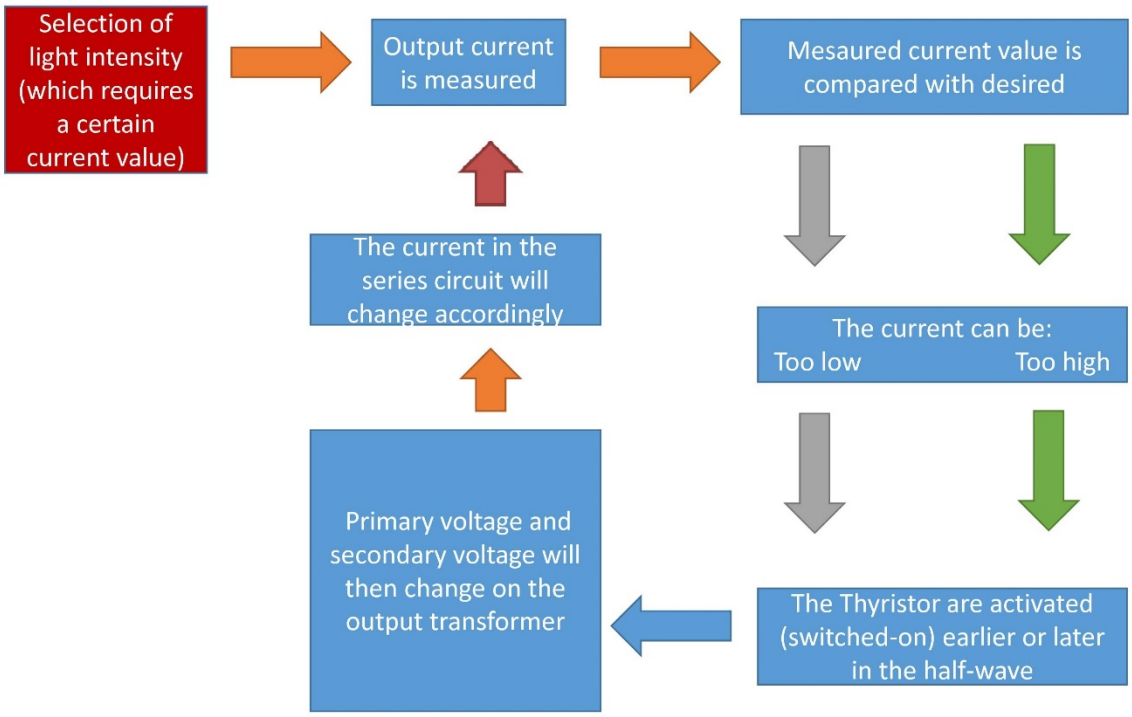

Principle for the regulation circuit.

- Trigger Module
  This module converts the control signal from the µ-processor to galvanic separated power signals to the thyristors.
  To be able to guarantee triggering (activation) of the thyristors under difficult circumstances (such as reactor load) the trigger signal is not only a single pulse, but a large number of trigger pulses.
  The Trigger module does also include a galvanic separation (Solid State Relay) between the on signals from the Main Board to the main contactor.
  In the same manner the cyclic control of the ISO measurements are performed. When a measurement is requested, 42VAC is connected to the ISO box via a Solid State Relay.
- Remote Control System
  The Main Board Module includes a standard RS485 communications port. This can be connected directly to the remote control system.
  For more sophisticated protocols, an additional printed board can be built into the CCR module. As standard, Hella Induperm can offer Profibus or redundant Profibus plug-in boards.
  If IP addresses are requested, an IP module is placed in the CCR cubicle and communicates with the module though our RS485 serial communication.
  If parallel interface to a remote control system is requested, a Parallel interface module is placed in the CCR cubicle and communicates with the module though the RS485 serial communication.
- Information Display
  The CCR Module is equipped with a large LCD display.
  The following information can be seen in the display:
    - Output Current
    - Output voltage
    - Output power
    - Time and date
    - Hour meters
    - Selected step
    - Actual regulation reserve
    - Alarms
    - Number of faulty lamps
    - Isolation level

From the front of the CCR Module, it is possible to change all settings.
As mentioned, the CCR module is a plug-in unit.
The electrical connections:

- Power input (N+PH or PH+PH, +Ground)
- Power output to power transformer (output transformer)
- Current feed-back measurement
- ISO measuring
- Serial communication (RS485 or Profibus)

are all done via our special high performance connector. The connector is mounted on screws with springs, which will secure full contact in the connector. That’s the reason, why it is important that the module after plug-in is fastened with the screws in the front.

The wiring of the module and connections to Output transformer and measuring signals, is shown on the diagram on the following page.

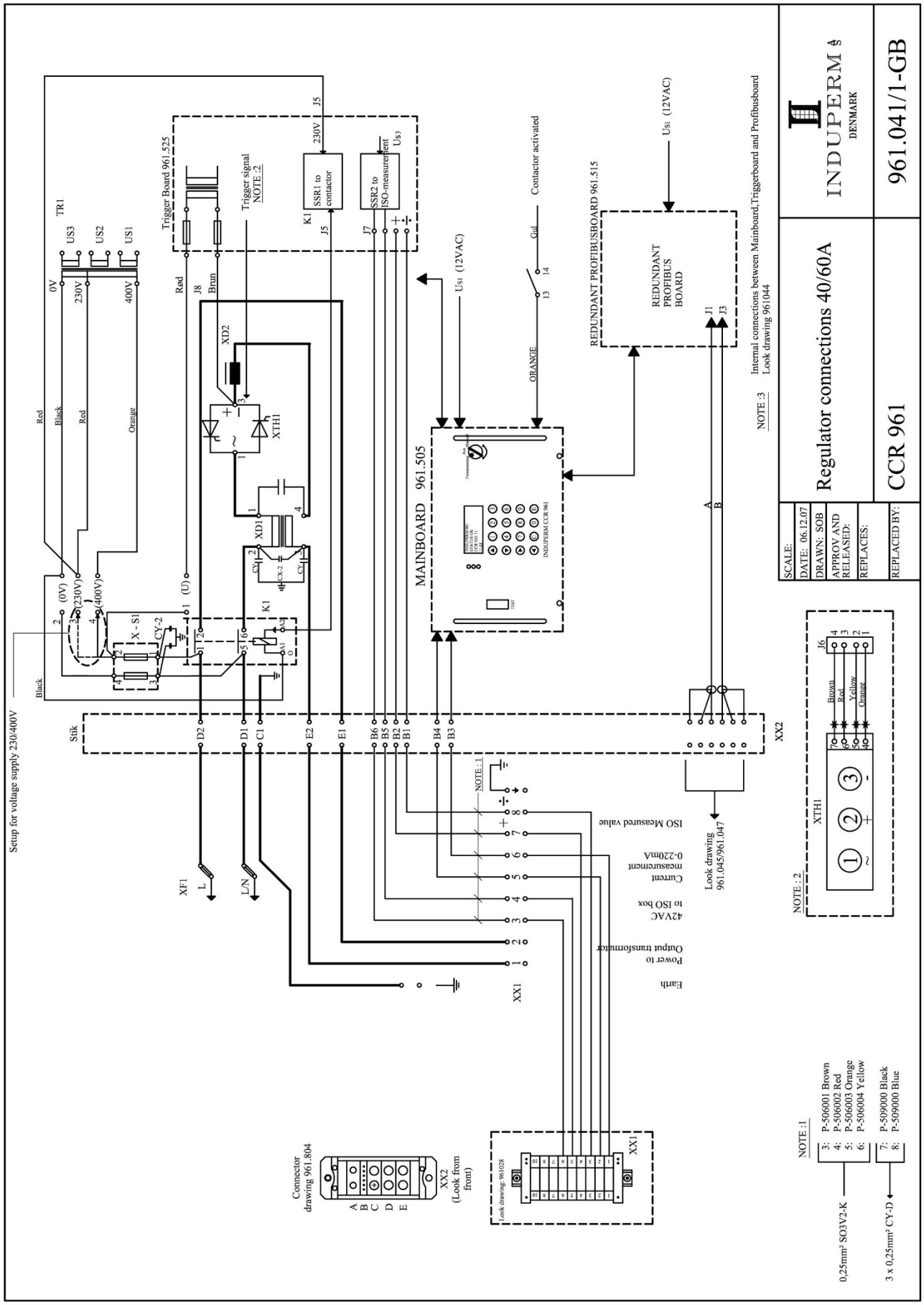
Setup for voltage supply 230/400V
TR1
US3
US2
US1
0V
230V
400V
Trigger Board 961.525
Trigger signal
NOTE :2
SSR1 to contactor
SSR2 to ISO-measurement
K1
J5
J7
J8
Red
Brun
Black
Orange
XD2
XTH1
XD1
CY-1
CY-2
CY-3
X - S1
(0V)
(230V)
(400V)
(U)
Stik
D2
D1
C1
E2
E1
B6
B5
B2
B1
B4
B3
XF1
L
L/N
NOTE : 1
ISO Measured value
Current measurement 0-220mA
42VAC to ISO box
Power to Output transformator
Earth
XX1
Connector drawing 961.804
XX2 (Look from front)
A
B
C
D
E
Look drawing 961028
MAINBOARD 961.505
Contactor activated
Gul
ORANGE
13
14
REDUNDANT PROFIBUSBOARD 961.515
REDUNDANT PROFIBUS BOARD
J1
J3
Us1 (12VAC)
Internal connections between Mainboard,Triggerboard and Profibusboard
Look drawing 961044
NOTE :3
Look drawing 961.045/961.047
XX2
J6
Brown
Red
Yellow
Orange
XTH1
NOTE : 2
NOTE :1
3: P-506001 Brown
4: P-506002 Red
5: P-506003 Orange
6: P-506004 Yellow
7: P-509000 Black
8: P-509000 Blue
0,25mm² SO3V2-K
3 x 0,25mm² CY-D
INDUPERM
DENMARK
961.041/1-GB
Regulator connections 40/60A
CCR 961
SCALE:
DATE: 06.12.07
DRAWN: SOB
APPROV AND RELEASED:
REPLACES:
REPLACED BY:

3.3 Operating Description

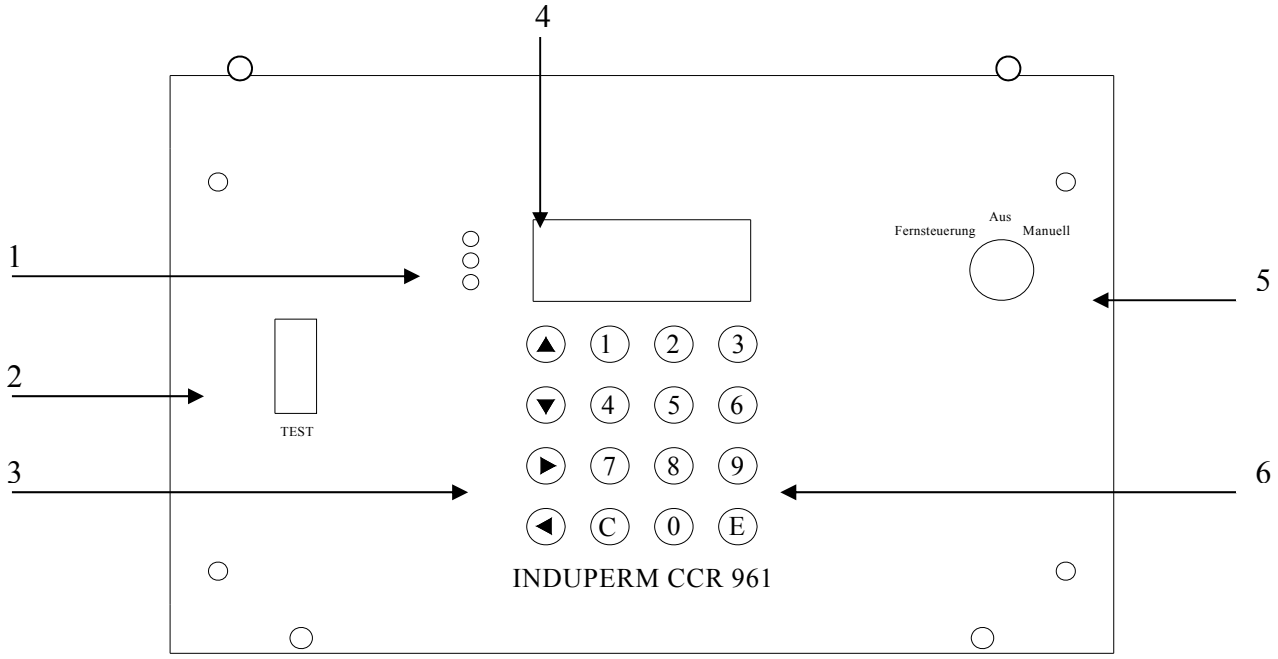

1. LED
2. Communication port
3. Arrow keys
4. LCD display
5. Key switch
6. The keys 0-9 + E & C

1. LED: RED (top) – YELLOW (in the middle) – GREEN (bottom)

RED:
A flashing red LED indicates that the regulator is in either ‘manual’ or ‘turned off’.
Constant light in the red diode indicates that there is some kind of an alarm.

YELLOW:
Constant light in the yellow diode indicates that the earth error measuring is active.
A flash every two. seconds indicates that the earth error measuring is disconnected permanently.

GREEN:
The light in the green diode means, that the actual current in the serial circuit is equal to the “Should-Be” value ± 0.4A.

This means that the green light will turn off shortly when switching and changing the level of the current.
The green diode will for instance be turned off if there are so many defect lights in the circuit that the regulator reserves are not sufficient to give the required current value at the relevant level (most often the 100% level).

If the green light is off for more than 1-5 seconds (adjustable), the step back-indication to the remote control will disappear.

2. On the communication port the oscilloscope or the PC can be connected to read out values from the regulator.

3. The arrow keys are used to navigate the menus on the regulator. The arrow keys have other functions as well in the individual menus.

4. LCD display:
Here you see a number of parameters such as:
- Analogue values
- General information
- And directions for potential activities

5. The key switch has three positions: Remote control – Turned off – Manual control.

- REMOTE CONTROL (FERN)
  When the key switch is in Remote control mode, the regulator can be switched-on and off, and light intensity step can be selected from the Remote Control System.

- TURNED OFF (AUS)
  When the key switch is turned off, it means that the regulator can be controlled neither from the keyboard nor from the remote control.

- MANUAL CONTROL (MANUAL)
  When the key switch is in Manual control mode, the regulator can be controlled by way of the keyboard on the regulator.
  Back-indications, alarms and analogue values will, however, still be send to the remote control system.
  When you switch from Remote control mode to Manual control mode, you have to pass the Turned off position. To prevent the regulator from switching-off, the key switch must be turned quickly past turned off. The regulator will stay at the level to which it has been connected from the remote control.

  When you switch from Manual control mode to Remote control mode, you have to pass the Turned off position. To prevent the regulator from switching-off, the key switch must be turned quickly past turned off. The regulator will switch to the intensity level selected from the remote control.
  You change between the ordinary menus by using the arrow keys (→←), irrespective of the position of the key switch without affecting the setting of the light.
  You can for instance browse forward to Menu 3 (ISO Mess. circuit) and activate a measurement.

6. The keys 0-9 + E & C:
The keys 0-7 can be used to switch-on or off in light intensity levels 1-7 where 0 is used for switching-off.
When pressing a key between 0-7 above the max number of steps to which the regulator is set, the regulator will connect to the 100% level.
The keys 0-9 are also used for indicating new values, e.g. in the adjusting mode.

Press the E key to get into the adjusting mode. The key is moreover used for acknowledging. The 0 key is used to resetting any alarms. The key switch must be in the OFF position.

The most frequent adjustments are described in the Step-by-Step instruction.

3.4 The menu's

There are more menu areas:
Normal menu (no access code needed) with the menu's N1 – N12
User menu (user code) with the menu's U1 – U 21
Factory menu (factory code) with the menu's F1 – F19
Normal menu is only for display of data, while User and Factory menu are for setting and adjustment of the CCR.
Below is given information about what can be read and done by means of the Normal menu, while information about settings and possibilities in User and factory menus are given in section 5.2.

Normal menu:

Menu no.	Menu information	Eventual special function
N1	Series circuit name Actual output current Actual selected intensity step Remote – Off – local operation selected	Press > ← <: Lower text line shows: 10/(500-XXX), where XXX is the actual trigger firing position (called "pyk). The CCR always returns to this menu (after 2 min.). Press > ↓ <: Lower text line shows current mode, ISO mode and RS485 address Press > E <: Brings you directly to menu N7
N2	Actual output current Actual output voltage Actual input voltage Actual output power	Press > E <: When the CCR is set to "Learn" for lamp supervision (see 5.3.11) it will automatically note and store the Z-value for each step (Z = Uout / Iout)
N3	Lamp Alarm No. of faulty lamps	Press > E <:
N4	Circuit Isolation Last found value (can be 3 hours old) Measuring active or off	Press > ↑ < : Activates a new isolation measurement (also with CCR in Remote Control).
N5	Hour count Total in 100% step Total for all steps System Temperature in °C	
N6	CCR961 SW version Time Date RS485 address (node)	
N7	Adjustment? Enter Code	If you want to go to user or factory menu, enter the code and press > E <

3.5 Power Transformer

Standard sizes are as follows: 2,2 - 3 – 5 – 7,5 – 10 – 12,5 – 15 – 20 – 25 – 30 - 35kVA.
The Transformers are, as standard, available for 230V or 400V. For all types larger than 20 kVA, the standard is 400V. Other primary voltages upon request.
As our standard is preferred the 400V series, as the total losses for the CCR are less than for the 230V series.
The transformers are constructed with two coils, each with a primary and a secondary side.
The two primary windings are, as standard connected in parallel, so each winding only have to be calculated for 50% of the nominal primary current.
It is possible to change the primary windings from parallel to series, if the following conditions are observed:

- A transformer for 230V can be used for 400V primary voltage with the two primary windings in series.
- For a transformer with a rating more than twice the actual needed load, it is an advantage to connect the two windings in series for better adjustment to the load. Max. Load is only 50 % of nominal load.

The secondary winding is with several tappings for adjustment to actual load.
The two secondary windings are always connected in series.
The transformers are air-cooled.

POWER TRANSFORMER

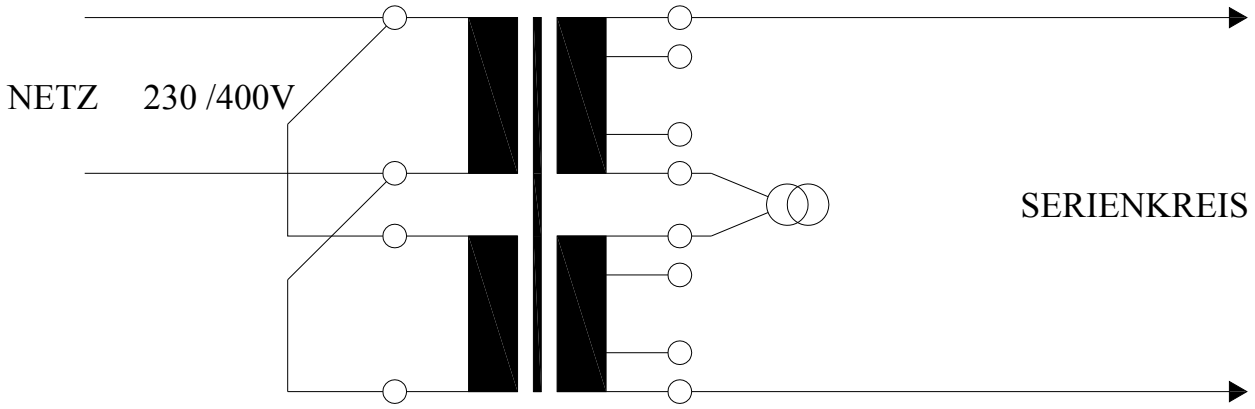

4 CCR installation

4.1 Unpacking the CCR shipment

The CCR's are supplied on a pallet, and covered in a plywood box.
Remove the screws in the top and bottom of the plywood box, and the box can be lifted off the CCR pallet, and folded.
The CCR cubicle are bolted to the pallet. Remove the bolts and eventual additional transport support for the output transformer and the CCR cubicle can be removed from the pallet.

4.2 Before the installation

Check the planned installation location. The floor must be stable, and the CCR cubicle must be fastened to the floor. The room must be ventilated and free air circulation from under the cubicle must be secured. If this cannot be guaranteed, a special front door with air-inlets must be ordered.
The CCR cubicles can be placed directly next to another, and as all services can be performed from the front the CCR cubicle can be placed with the backside directly to a wall.

4.3 CCR installation

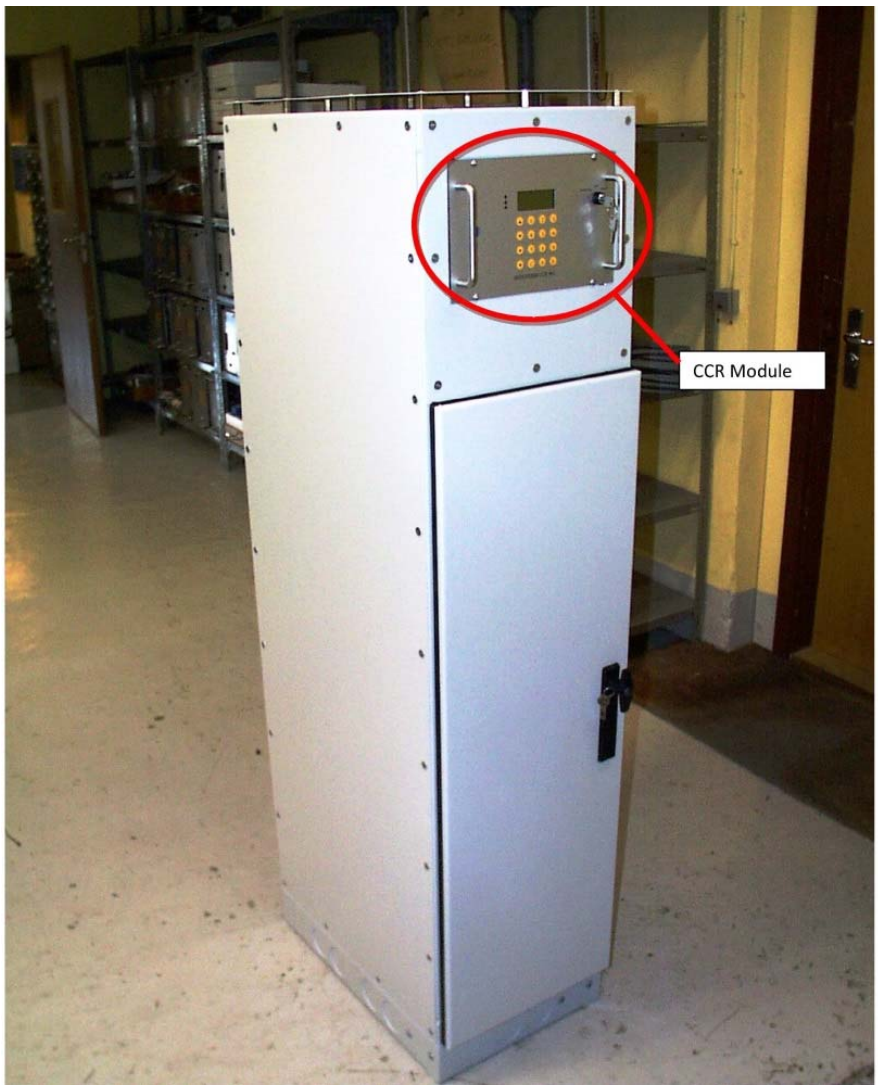

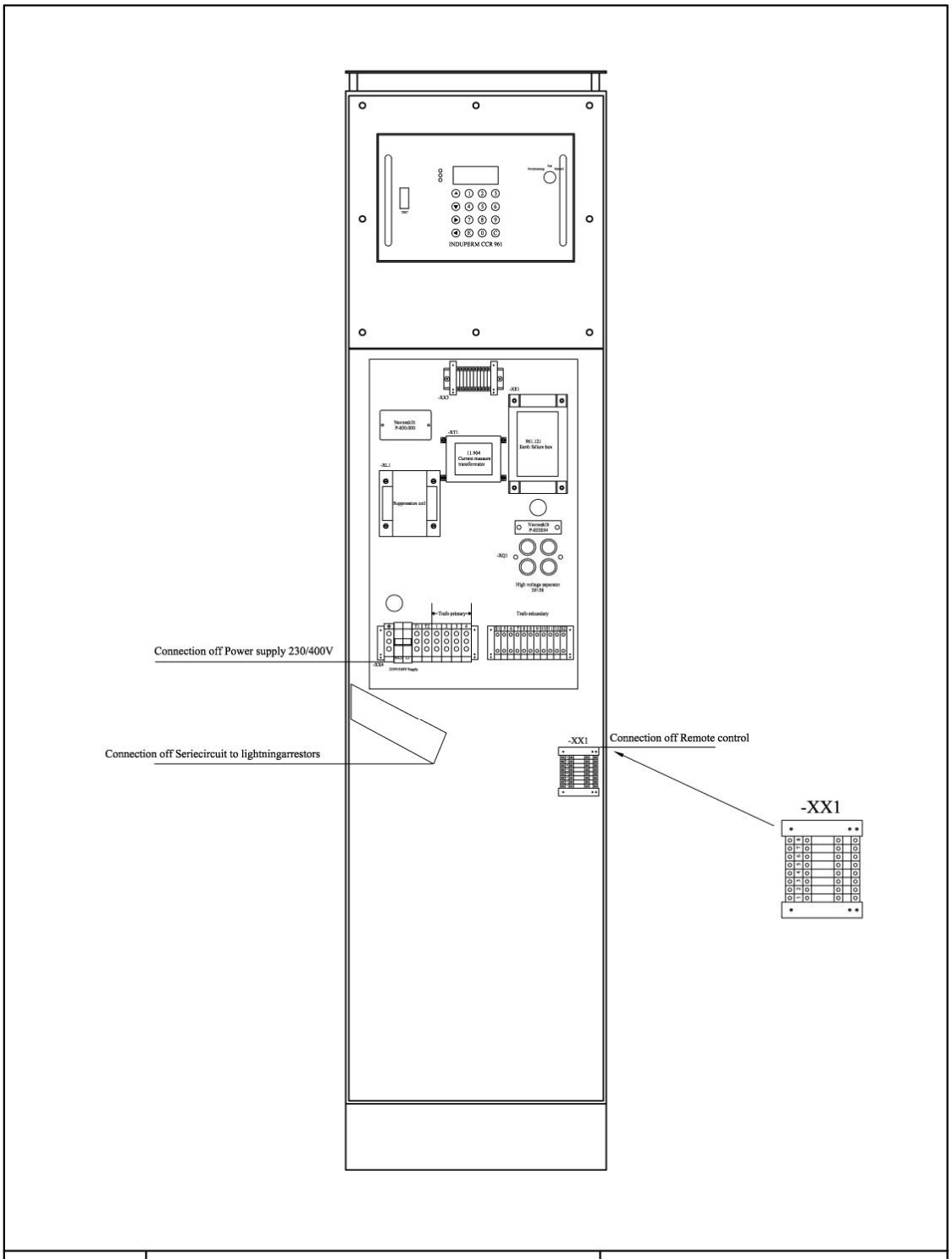

SCALE:	Installation off CCR 961 FAA Regulator	INDUPERM A/S DENMARK
DATE: 28.09.10		
DRAWN: SOB		
APPROV AND RELEASED:		
REPLACES:		961.163-GB
REPLACED BY:		

CCR front view

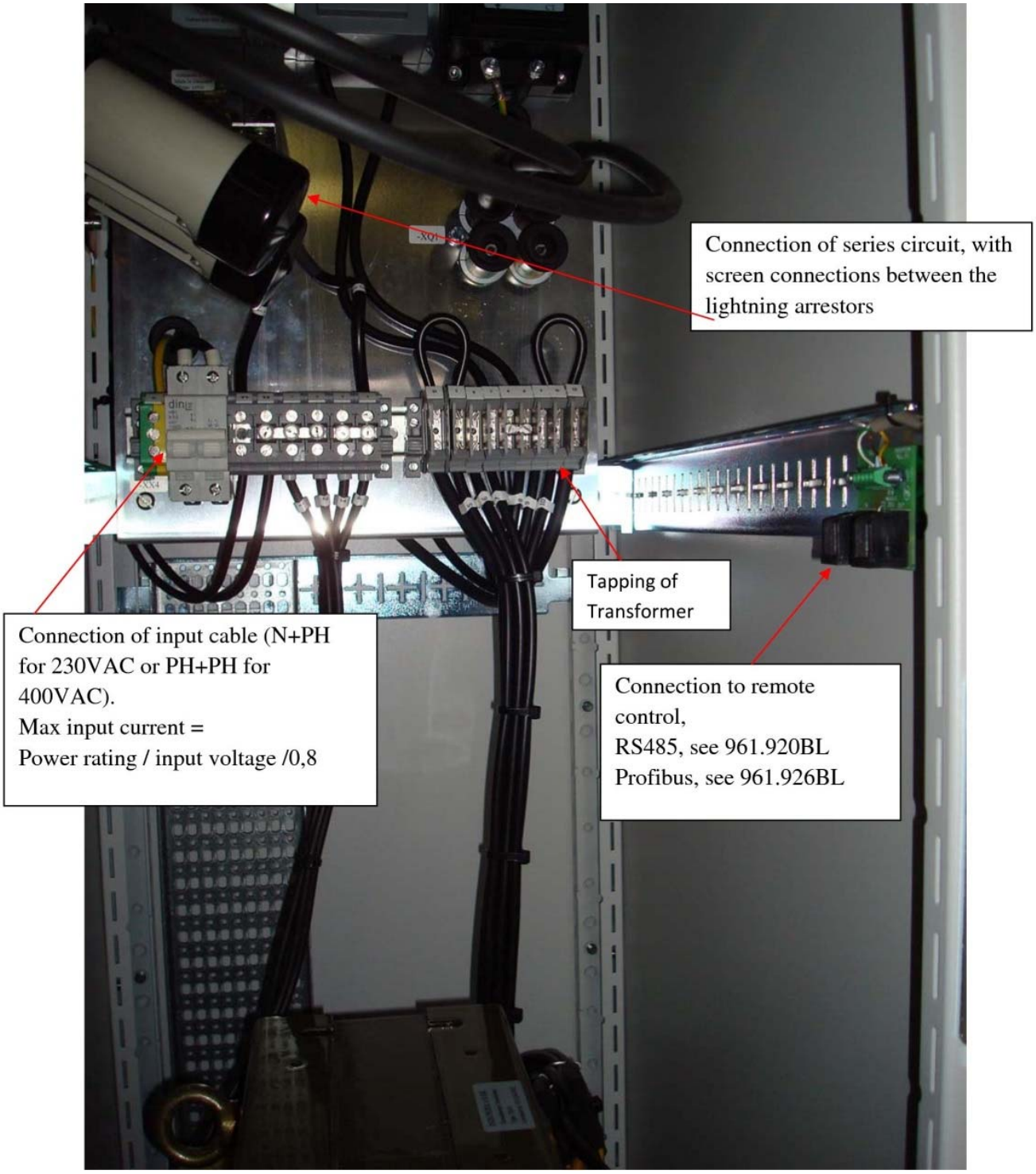

Comments:

- Remote connection for RS485 can be by means of terminals or RJ45 plugs
- Input power cable dimension must be according to calculated max. input current
- Series circuit cables must be connected by means of cable shoes, and these are normally included in the delivery (mounted on lightning arrestors)

5 Commissioning

5.1 Preparation

Commissioning and adjustment normally have to be certified in a protocol. This protocol can be made by means of the serial interface on front of the CCR together with a Monitor Program, or it can be done by hand on, by reading values in the display.

A. <u>Conditions for a correct adjustment:</u>

- The CCR is wired for correct supply voltage (230V or 400V, factory setting is 400V)
- Remote control address is set to correct value
- The series circuit is controlled for acceptable isolation value and continuity
- The remote control cable is connected

B. <u>Assembling:</u>

- The Key switch is set in position ”OFF” (= AUS).
- Power is switched on
- No blinking must occur in the display
- The Key - switch is turned to position ”Manual” (local operation)

C. <u>Setting and adjustments:</u>

There are more menu areas:

<u>Normal menu</u> (no access code needed) with the menu’s N1 – N12
<u>User menu</u> (user code) with the menu’s U1 – U 21
<u>Factory menu</u> (factory code) with the menu’s F1 – F19

Normal menu is only for display of data, User and Factory menu are for setting and adjustment of the CCR.

The following adjustment procedure is valid for CCR’s supplied directly from work, where Default data are activated and the CCR is calibrated for Iout.
The CCR will work without additional settings, but for full function of lamp supervision etc., the following control / adjustments in the relevant menu can be performed.

The User- and Factory menus can only be accessed by the use of a code. The codes will be listed in the enclosed Factory Test protocol.

5.2 Control of settings in each menu.

1. The CCR is entered into **User Mode** (from Normal menu 1), by pressing:
   - >E<
   - Enter Code for User Mode

   With > → < (arrow right) the menus are controlled/corrected as follows:

Menu No.	Menu Name	Default Value	Comments
U1	Lamp alarm		Only for LAME adjustments (Point F)
U2	Std. L (Delta)	250	Only used in LAME minimum procedure
U3	Max lamps	40	Number of lamps in circuit
U4	Normal / %	50 %	No of faulty lamps as numbers or in %
U5	Lamp alarm	2 / 5	Alarm limit 1 and 2 to be set
U6	ISO Meas.	3 Hours	Time between ISO measurements
U7	ISO alarm 1	250K – 500K	Set ISO alarm level 1
U8	ISO alarm 2	25K – 50K	Set ISO alarm level 2
U9	On-ref band	0,5A	Accepted current deviation
U10	Imin	1,5A	
U11	Step/ I out	1: 2,8A 2: 3,3A 3: 4,0A 4: 5,1A 5: 6,5A 6: 5,2A 7: 6,5A 8: 1,0A	Current values to controlled / adjusted Step 8 is a special “black-current” step developed for Stopbarre operation. Imin in step 8 reduced to 0,3A
U12	Interlock time	0 s	If interlock time is set > 0s, the CCR will automatically go back to originally step after the set time in step 8. If time set = 0s, no automatic return will take place from step 8.
U13	No. of Steps	5	No. of active steps to be set
U14	Uout calibration		Uout calibration Must be performed after change of tapping on output transformer
U15	Uin		Uin calibration
U16	Uin min. alarm	0V	Alarm limit for Uin. The alarm level for Uin-alarm can be set between 304 and 380V. If limit set to 0, the alarm is deactivated. The alarm is delayed 2½ minute. In case of alarm, the CCR will be switched-off, and the alarm must be reset before the CCR can be switched-on again. A special setting is activated by setting the limit to 300, and means: CCR will be switched off (2½ min. delayed) if input voltage gets below 305V and will AUTOMATICALLY switch on again (10 s delayed) when input voltage get over 323V.
U17	Display Contr.	5	
U18	Display light	7	Brightness adjustment
U19	Language	English	Select display-language
U20	Circuit name		Name of series circuit is set
U21	User password	0725	
U22	Tapping contr.		Only valid for 400V input
U23	Z-alarm	Inactive	Recommended activated for circuits > 12,5KVA
U24	Ipeak start	Inactive	Default is soft start
U25	Watch calibr.		Factory setting is UTC
U26	Store data		New data stored by pressing >E< Select default values by pressing >5<

The CCR is entered into **Factory Mode**:

- >E<
- Enter code for Factory Mode

With > → < (arrow right) the menus are controlled/corrected as follows:

Menu Nr.	Menu Name	Default Value	Settings for circuits with Uout-max < 1500V	Settings for other circuits	Comments
F1	Ucurve-zero	160	Default, except for CCR's on 230V supply, where a value of 100 is selected		In circuits with harmonics, instability in LAME or in the value for regulation reserve can occur. In such cases the value is increased in steps of 20.
F2	Iout				This calibration is done in the factory
F3	Hour count				Hour counter for 100 % step can be reset by pressing >0<
F4	Imin delay	0,5s	Default	Default	Delay by Normal Imin switch-off (I < 1,5A)
F6	On-ref Band	0,4A	Default	Default	
F7	Imax calibrate	6,75A	Default	Default	
F8	On-ref out delay	4,0s	Default	Default	Delay towards Remote Control
F9	I-peaktime	0,4	Default	Default	Ipeak regulation during Soft Start
F10	I-peakmax	10,0Ap	Default	Default	Ipeak value during Soft Start
F11	I peak-limit	4100 (OFF)	4100 (Off)	4000	Max. Value 4100
F12	Z engage delay	0,6s	Default	Default	Z delay during switch-on. Note: F14 must be adjusted first.
F13	Z alarm delay	0,5s	Default	Default	Z delay in normal use
F14	Z Factor	2,0	4,0	2,5	
F15	User Password	0725	Default	Default	Password for User Mode can be changed
F16	Reg. max	35	Default	Default	Reg. "max": Max "pyks's" in each regulation step
F17	Up regulation	0,4	Default	Default	Factor for calculated reg. step, up
F18	down regulation	0,6	Default	Default	Factor for calculated reg. step, down
F19	Reg. delay	3	Default	Default	Factor (x10mS) delay between regulations
F20	LED init value	250	Default	Default	Pyk-Limit during softstart
F21	Thy. max range	80			Lowest TG. angle
F22	Imin-M Off	Inactive	Default	Default	Imin-M deactivated (only possible in Local operation mode
F23	Imin-N Off	Inactive	Default	Default	Imin-N deactivated (only possible in Local operation mode
F24	ISO type	1			1: Analog (in ranges) 2: Digital, direct value in KΩ
F25	Inorm type	1			100% output current: 0: 2,2A 1: 6,6A 2: 13,2A
F19	Store Data				Store new values by pressing >E<

5.3 Step by Step adjustments

Operation and adjustments can be performed in different menus, please consult 961.002 for more details:
Normal Menu (no code) with the menus N1 – N7: Normal CCR operation and data read-out
User Menu (User code) with the menus U1 – U26: Standard user adjustments
Factory Menu (Factory code) with the menus F1 – F19: Special adjustments

To get access to the User or Factory menu, the CCR must be in menu N1 (where the Output Current is shown), then press ”E”, followed by the relevant code, ending by pressing ”E” again.
Now you can change between the different menus by means of the push button right → or left ←.
When all values are as wanted, go to the final menu to store the new values by pressing ”E”.
In the final menu, you could also select to eliminate the new adjustments by pressing ”C” or you can select the factory default values by pressing ”5”.
An easy way to get to the final menu where the data are stored is to press arrow right→ for some seconds.
Remember, always save data changes when leaving the User menu (>E< in menu U22) **or leaving the Factory Menu** (>E< in menu F19).

Simple adjustments and operation instructions, “Step by step”

3.1. Alarm acknowledge

3.2. Manuel selection of intensity step

3.3. Adjustment of number of intensity steps

3.4. Adjustment of current in each step

3.5. Reading of actual isolation value for the series circuit

3.6. Adjustment of alarm limits for isolation level

3.7. Adjustment of alarm limits for lamp failure

3.8. Adjustment of time / date

3.9. How to change the language in the display

3.10. How to set up the name of the series circuit (f.i. RCL L1)

3.11. Procedure for the change of a CCR module

3.1 Alarm acknowledge

A current alarm can be a minimum (Imin) or a maximum (Imax) alarm, and each of these alarms will always switch-off the CCR.
The CCR can only be switched-on again, when the actual alarm have been acknowledged.
Other types of alarms, LAME or ISO, needs no acknowledgement as the CCR is not switched-off, and the alarms will automatically disappear when the alarm condition disappear.
Before a current alarm is acknowledged, it is important to record the exact type of alarm shown in the CCR display. The possibilities are as follows:

- Imax alarm
- Imin-N, which is the normal Imin alarm telling that the current in the series circuit have been below the adjusted value for Imin (normal value is 1,5A)
- Imin-M, telling that the signal is missing from the current measuring transformer (the feedback signal)
- Imin-Z, telling that the impedance in the series circuit is several times bigger as the normal value. This is used for supervising open circuit conditions in long circuits with large capacitive currents.

Alarms acknowledge:

- The Key switch is turned to the position “OFF”
- Press ”0” and see the alarm description disappear in the CCR display
- The Key switch is turned to the position ”Manual”
- Switch-on the CCR in step 1 by pressing ”1”, while observing the current value in the display
- If the CCR is not working properly, Trouble Shooting must be performed. This could f.i. be repair of fault in series circuit or mounting a spare CCR module.
- If the CCR is working properly, check all relevant steps and then the Key switch is turned to ”Remote”

3.2 Manuel selection of intensity step

- The Key switch is turned to position ”Manual”
- Switch-on the CCR in step 1 by pressing ”1”. Other intensity steps may be selected in the same manner. The CCR can be adjusted for up to 7 active intensity steps. If you try to select a higher step than selected as active steps, the CCR will go to the 100% light intensity step.

3.3 Adjustment of current in each step

- The Key switch is turned to position ”Manual”
- Press ”E”
- Enter the code for User Menu
- Press ”E”
- Press → 10 times to the display shows ”Intensity steps / Iout”
- Use the push-buttons 0 – 9 to enter the desired output current value for step 1
- Press ”E”
- Press ↑ (arrow up) to select the next step. Repeat the two previous steps
- Repeat this for all relevant light intensity steps
- Press → some seconds to get to the menu for ”Store data”
- Press ”E”

Standard current values (Default Values):

Step	1	2	3	4	5	6	7
Current (A)	2,80	3,40	4,1	5,20	6,50	5,20	6,50

3.4 Adjustment of number of intensity steps

- The Key switch is turned to position ”Manual”
- Press ”E”
- Enter the code for User Menu
- Press ”E”
- Press → 11 times to the display shows ”Max no. of steps”
- Use the push-buttons 1 – 7 to select the number of active steps
- Press → some seconds to get to the menu for ”Store data”
- Press ”E”

3.5 Reading of actual isolation value for the series circuit

- Press → 3 times to get to the menu ”Circuit Isolation”. The value shown in the display may be several hours old as the Isolation Value is only measured in certain intervals.
- Pressing ↑ will start a new measurement
- After app. 10s, the new ISO value can be read in the display

3.6 Adjustment of alarm limits for isolation level

- The Key switch is turned to position ”Manual”
- Press ”E”
- Enter the code for User Menu
- Press ”E”
- Press → 6 times to see ”Circuit Isolation – Alarm 1” in the display
- Use ↑↓ to select the isolation value for the ”Alarm 1” limit
- Press → once to see ”Circuit Isolation – Alarm 2” in the display
- Use ↑↓ to select the isolation value for the ”Alarm 2” limit
- Press → some seconds to get to the menu for ”Store data”
- Press ”E”

3.7 Adjustment of alarm limits for lamp failure

- The Key switch is turned to position ”Manual”
- Press ”E”
- Enter the code for User Menu
- Press ”E”
- Press → 4 times to see ”Lamp alarms” in the display
- Press ↑ and the value for ”Alarm 1” limit will start flashing
- Use the push-buttons 0 – 9 to enter the desired value for alarm limit 1
- Press ”E”
- Press ↑ and the value for ”Alarm 2” limit will start flashing
- Use the push-buttons 0 – 9 to enter the desired value for alarm limit 2
- Press ”E”
- Press → some seconds to get to the menu for ”Store data”
- Press ”E”

3.8 Adjustment of time / date

- The Key switch is turned to position ”Manual”
- Press ”E”
- Enter the code for User Menu
- Press ”E”

- Press → 24 times to see ”Calibration of watch” in the display
- Press ↑ and the value for ”Hours” will start flashing
- Use the push-buttons 0 – 9 to enter the desired value for hour
- Press ”E”
- Press ↑ and the value for ”Minutes” will start flashing
- Use the push-buttons 0 – 9 to enter the desired value for minutes
- Press ”E”
- Press ↑ and the value for ”Day” will start flashing
- Use the push-buttons 0 – 9 to enter the desired value for day
- Press ”E”
- Press ↑ and the value for ”Month” will start flashing
- Use the push-buttons 0 – 9 to enter the desired value for month
- Press ”E”
- Press ↑ and the value for ”Year” will start flashing
- Use the push-buttons 0 – 9 to enter the desired value for year (2 last digits)
- Press ”E”
- Press → some seconds to get to the menu for ”Store data”
- Press ”E”

3.9 How to change the language in the display

- The Key switch is turned to position ”Manual”
- Press ”E”
- Enter the code for User Menu
- Press ”E”
- Press → 18 times to see ”Language” or “Sprache” in the display
- Press ↑↓-push buttons to select the desired language
- Press → some seconds to get to the menu for ”Store data”
- Press ”E”

3.10 I How to set up the name of the series circuit (f.i. RCL L1)

- The Key switch is turned to position ”Manual”
- Press ”E”
- Enter the code for User Menu
- Press ”E”
- Press → 19 times to see ”CCR Name” in the display

The CCR Name (or more correctly the name of the series circuit) is constructed as follows:
XXXX Z1 Z2 Z3 Z4, where:

XXXX can be selected among the following terms:
APH-APL-RSR-THR-PAPI-REH-REL-RWE-RCL-TDZ-TXC-TXE-STB-RGL-TXS-SPEC!

Each of the digits Z1, Z2, Z3 and Z4 can be selected between the following:
0-9, L, -, space,

If the option SPEC! is selected for XXXX each digit (all together) can be given an ASCII value.

- Press >E< 4 times until ” ^^^^” is shown in the display.
- Press ↑↓-push buttons to choose the XXXX term
- Press >E<
- Press ↑↓-push buttons to select the Z1 value
- Press >E<
- Press ↑↓-push buttons to select the Z2 value
- Press >E<
- Press ↑↓-push buttons to select the Z3 value
- Press >E<
- Press ↑↓-push buttons to select the Z4 value
- Press ”E”
- Press → some seconds to get to the menu for ”Store data”
- Press ”E”

ASCII Code:

(	(	ASCII: opening parenthesis
)	)	ASCII: closing parenthesis
*	*	ASCII: asterisk
+	+	ASCII: plus sign
-	-	ASCII: hyphen-minus
.	.	ASCII: period
0	0	ASCII: digit zero
1	1	ASCII: digit one
2	2	ASCII: digit two
3	3	ASCII: digit three
4	4	ASCII: digit four
5	5	ASCII: digit five
6	6	ASCII: digit six
7	7	ASCII: digit seven
8	8	ASCII: digit eight
9	9	ASCII: digit nine
:	:	ASCII: colon
=	=	ASCII: equals sign
A	A	ASCII: Latin Capital Letter A
B	B	ASCII: Latin Capital Letter B
C	C	ASCII: Latin Capital Letter C
D	D	ASCII: Latin Capital Letter D
E	E	ASCII: Latin Capital Letter E
F	F	ASCII: Latin Capital Letter F
G	G	ASCII: Latin Capital Letter G
H	H	ASCII: Latin Capital Letter H
I	I	ASCII: Latin Capital Letter I
J	J	ASCII: Latin Capital Letter J
K	K	ASCII: Latin Capital Letter K
L	L	ASCII: Latin Capital Letter L
M	M	ASCII: Latin Capital Letter M
N	N	ASCII: Latin Capital Letter N
O	O	ASCII: Latin Capital Letter O
P	P	ASCII: Latin Capital Letter P
Q	Q	ASCII: Latin Capital Letter Q
R	R	ASCII: Latin Capital Letter R
S	S	ASCII: Latin Capital Letter S
T	T	ASCII: Latin Capital Letter T
U	U	ASCII: Latin Capital Letter U
V	V	ASCII: Latin Capital Letter V
W	W	ASCII: Latin Capital Letter W

X	X	ASCII: Latin Capital Letter X
Y	Y	ASCII: Latin Capital Letter Y
Z	Z	ASCII: Latin Capital Letter Z
`	`	ASCII: spacing grave
a	a	ASCII: Latin Small Letter A
b	b	ASCII: Latin Small Letter B
c	c	ASCII: Latin Small Letter C
d	d	ASCII: Latin Small Letter D
e	e	ASCII: Latin Small Letter E
f	f	ASCII: Latin Small Letter F
g	g	ASCII: Latin Small Letter G
h	h	ASCII: Latin Small Letter H
i	i	ASCII: Latin Small Letter I
j	j	ASCII: Latin Small Letter J
k	k	ASCII: Latin Small Letter K
l	l	ASCII: Latin Small Letter L
m	m	ASCII: Latin Small Letter M
n	n	ASCII: Latin Small Letter N
o	o	ASCII: Latin Small Letter O
p	p	ASCII: Latin Small Letter P
q	q	ASCII: Latin Small Letter Q
r	r	ASCII: Latin Small Letter R
s	s	ASCII: Latin Small Letter S
t	t	ASCII: Latin Small Letter T
u	u	ASCII: Latin Small Letter U
v	v	ASCII: Latin Small Letter V
w	w	ASCII: Latin Small Letter W
x	x	ASCII: Latin Small Letter X
y	y	ASCII: Latin Small Letter Y
z	z	ASCII: Latin Small Letter Z

3.11 Procedure for the change of a CCR module

- The Key switch is turned to position ”Manual”
- The CCR module is removed from the cubicle
- The Memory-stick from the ”old” module is mounted in the ”new” module
- In the ”new” module the remote control address is set by means of the belonging DIP-switch. See instruction on the side of the module or simply copy the setting on the ”old” module.
- The module is set for the correct operating voltage (230V / 400V). This is done by means of a lead in the terminal block above the automatic fuses in the module. The lead must be mounted in the terminal block marked 230V alternatively 400V.
  If adjusted for 230V, the module should be clearly marked ”OBS: 230V”
- The Log-schema on the side of the module should be filled-in with the name of the actual serial circuit.
- The Key switch on the ”new” module is set in position ”AUS” (OFF)
- The ”new” module is mounted in the cubicle

- See, that the display seems to be working normally (no flashing)
- The CCR module is switched-on in step 1, while observing the current in display. If the module seems to be working, the other steps are tested.
- In step 1, press the push button → 2 times to get to the menu for lamp failure. Allow the CCR a little time for calculations, then control that the number of faulty lamps is as expected.
- The Key switch can now be turned to the position ”Fern” (remote)

Adjustments and operation instructions, “Step by step” for super-users

3.11 LAME

3.12 Calibration of the Uout measurement

3.13 Control of the transformer tapping

3.11 LAME

Conditions for correct adjustment:

- All light intensity steps have been adjusted
- All lamps, connectors and isolating transformers in the circuit are OK
- All isolating transformers are identical. If not, the smaller one should be used for the adjustments.

OBS:
If for any reason, a LAME adjustment is not necessary on a circuit, a Learn procedure for Z, see section c, must be performed.

Principle

The idea behind the built-in adjustment procedure is, that the CCR as a start learns the electrical parameters in the circuit with all lamps OK, and after that the same with a number of faulty lamps. The procedure must be performed as a minimum with all lamps OK, but the accuracy will increase with a learn procedure with more faulty lamps.

If there is a demand for a high degree of accuracy with a high number of faulty lamps, a learn procedure with 2, 3 or 5 faulty lamps can be performed, eventual followed by a correction with one or more “Break-points”, f.i. 8 and/or 12 faulty lamps.
Normally a Learn procedure with 2 or 3 faulty lamps will be sufficient, as the CCR from the learned data will calculate a higher number of faulty lamps.

We normally recommend a procedure as follows:

Learn procedure with number of faulty lamps				
Number faulty lamps	0	1	2	5 (+ evt. 8,12) = ”Break” Point
Minimal Procedure	X			
Normal Procedure	X	X		X (3)
Procedure for high accuracy	X	X	X	X

Adjustments:
Minimal procedure

1. The Key switch is set in position Manual
2. >E<
3. Enter code for user menu
4. >E<
5. Press >5< to start of learn procedure
6. Confirm ”All lamps OK?” by pressing >E<
7. The CCR will automatically run through all active steps
8. When the question ”-1 lamp?” pops up, press >C< shortly to end the Learn procedure
9. Then press >→< for some sec. until the ”Store Data menu“ is shown
10. Store the learned data by pressing >E<
11. ”Minimal procedure” for LAME is finalized

If only the Minimal procedure is performed, the CCR will not be able to ”recognize” the circuit with faulty lamps. It is therefore necessary to let the CCR use data from a ”standard transformer”. In User menu, U2 can be adjusted a desired L (delta) value. This procedure is useful to secure normal operation, without LAME alarms, but the accuracy is low.

Normal procedure

1. The Key switch is set in position Manual
2. >E<
3. Enter code for User Menu
4. >E<
5. Press >5< to start the learn procedure
6. Confirm ”All lamps OK?” by pressing >E<
7. The CCR will automatically run through all active steps
8. When the question ”-1 lamp?” pops up, remove one lamp in the circuit and press >E<
9. When the question ”-2 lamp?” pops up, press >C< shortly
10. Press >8< for ”Break-point”
11. Upon request for Break-point , enter 3
12. When the question ”-3 lamps?” pops up, remove 2 more lamps from isolating transformers in the circuit and press >E<
13. The CCR runs automatically through the active steps
14. When finished, press >C< shortly to end the Learn procedure
15. Then press >→< for some sec. until the ”Store data menu” is shown
16. Store the learned data by pressing >E<
17. ”Normal procedure” for LAME is finalized

Procedure for high accuracy
The accuracy from the Normal procedure can be improved by adding one or more ”break-points”:

- Remove the number of lamps belonging to the actual “Break-point”
- In User Menu 1 press >8< for ”Break-point”
- Upon request enter the number of faulty lamps, meaning ”- XX lamps?”, where XX is number of faulty lamps in the ”Break-point”, then press >E<
- The CCR runs automatically through the active steps
- When CCR is switched-off again, a new “Break-point” can be entered or
- Press >C< shortly to end the ”Break-point” procedure
- Press >→< some sec. until the ”Store data menu” is shown
- Press >E< to store learned data

Manuel correction in table with values for L / Ua.
If the CCR is not able to perform a satisfying Learn procedure, or if you want to modify one or more values, the following procedure must be followed:
Typical failures could be three horizontal lines in the display when a high percentage of lamps in a circuit are faulty, or the display of 1 faulty lamp, when you know that all lamps are Ok.
The values for L /Ua found during the Learn procedure are stored in tables.
Table 0 includes data for each light intensity step with all lamps OK, while table 1 is for all steps when 1 lamp is faulty, (table values are called L-values, while actual values are called Ua-values).
The actual value for Ua is in the LAME system constantly compared to the stored values in the tables. The Ua value will increase when lamps gets faulty.
Table values can be seen in the User menu U2:

- >E<
- Enter code for User Mode
- >E<
- Press >2<

	Step 1	Step 2	Step 3
Table 0	100	105	100
Table 1	250	270	240
Table 2	550	600	550

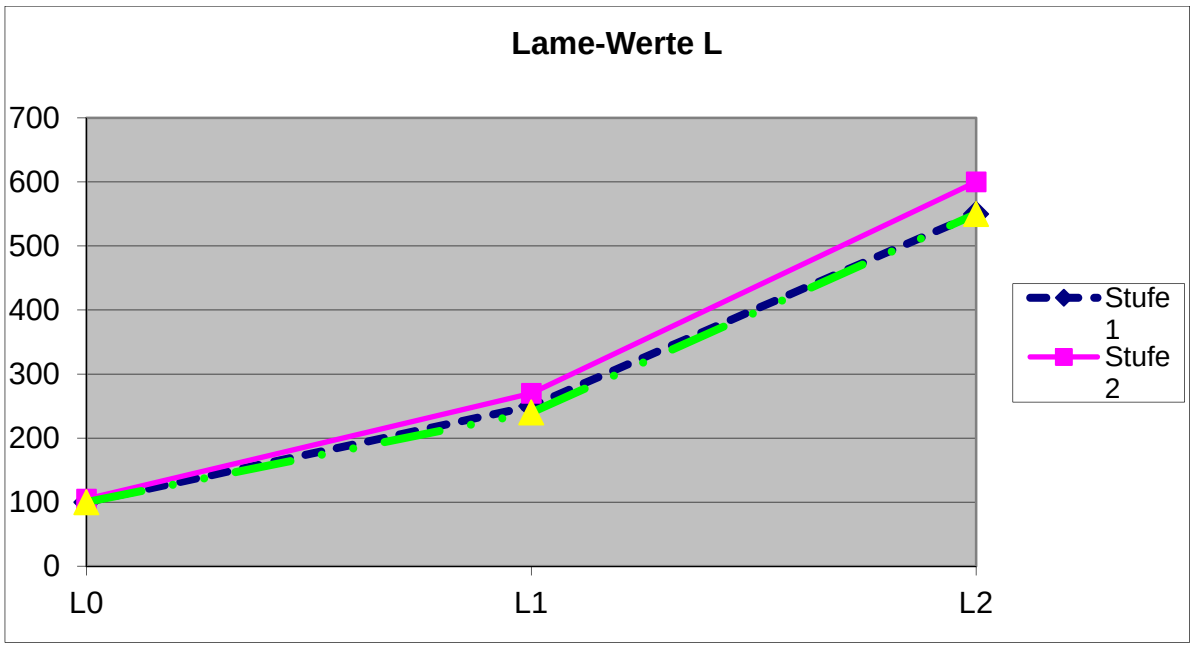

The values can also be seen in the Normal menu N3, where number of faulty lamps is normally shown.
Pressing >E< will change to display of step and actual Ua value (=Ua) together with Uo (=table 0 value for the actual step) etc. If all lamps are OK, the Ua value must be close to the Uo value, and with 1 faulty lamp the Ua must be close to U1 etc.
For the above shown table values, the CCR will in step 1 show 0 faulty lamps for Ua values up to 175 (average between 100 and 250), and show 1 faulty lamp for Ua values between 176 and 400.
If the Ua value in step 1 by 0 faulty lamp is a bit unstable, reaching a value above 175, the LAME will by mistake show 1 faulty lamp.

I we increase the value 100 in table 0 for step 1, the limit for showing 1 faulty lamp will be increased. If the value is changed from 100 to 120, the limit for 1 faulty lamp will be changed from 176 to 186.

a. The CCR is brought into User Mode
    - >E<
    - Press code for User menu
    - >E<
b. Press >2< for table
c. Change table by means of >→< or >←<
d. By means of up/down switches >↑<, >↓< we can select the value we want to change (flashing)
e. Enter the new value
f. Press >↓< to control that the value have been changed
g. >E<
    - Press >→< some sec. until the ”Store data menu” is shown
    - Press >E< to store learned data
    -

3.12 Calibration of the Uout measurement

The Uout measurement is done on the primary side of the Output Transformer, and multiplied with the voltage ratio for this transformer. This means that we have to calibrate Uout when the transformer tapping has been changed. The factory setting is for the output transformer in 100% tapping.

- The Key switch is turned to position ”Manual”
- Press ”E”
- Enter the code for User Menu
- Press ”E”
- Press → 13 times to see ”Uout Calibration” in the display
- Press ↑ to get to the desired step for calibration (normally the 100% step)
- The true output voltage value (see Note below) is entered by means of the 0 – 9 push-buttons
- Press ”E”
- Press → some seconds to get to the menu for ”Store data”
- Press ”E”

Note:
The true output voltage for calibration in the 100% step can be found in many ways:

a. The voltage can be measured by means of a high voltage measuring transformer and a true RMS voltmeter
b. The voltage on the primary side of the output transformer is measured with a true RMS voltmeter, and the value multiplied with the actual voltage ratio of the output transformer
c. The Uout is calibrate in the factory for 100% tapping. The output voltage is noted before any tapping is done.

3.13 Control of transformer tapping

Selection of the correct tapping on the output transformer can be based on a number of different criteria's, such as expected variations on the mains supply etc. See the special document for more details.
Below is given some simple guidelines for the control of the tapping or in connection with the change of tapping.

With the CCR in "Normal Menu 1, N1", where current and step are given, you can press the push-button ← and see the following figures: 10/(500 – XXX).
The figure XXX is an expression for the time delay in each half wave before the thyristors are activated, and in this way an expression for the regulation reserve when the CCR is in the 100% step.
We can recommend the following values for the figure XXX:

CCR size (KVA)	Isolating transformer nominal power (VA)	
	≤100	>100
0 – 2,2	230 – 250	250- 280
2,2 – 5	160 – 200	180 – 220
7,5 – 12,5	150 – 190	160 – 200
≥ 15	140 - 180	150 – 190

If the figure XXXX is too high, a lower tapping must be selected, if possible.
For very small CCR ratings, it might be necessary to increase the XXXX value, as a faulty lamp could cause an Imin alarm.

Tapping:
Tapping means changing the maximum output power of the CCR, by connecting the series circuit to a lower secondary output tapping than the maximum.
From factory, the CCR's will always be shipped connected to full output rating.
Dependent of type and power rating, the output transformers are supplied with tapping possibility in steps of 10% (three output terminals / coil) or with tapping possibility in steps of 7,5% (four output terminals / coil).

On the following page are diagram 961.906BL, showing the wiring in the CCR cubicle.

- In the top of the drawing is shown box simulating the CCR module.
- Top, right shows the Remote control terminals (-XX1).
- In the middle the current measuring transformer (-XT1) and the ISO box (-XE1)
- Below the output transformer, with the secondary terminals to –XX4, where the tapping is done.
- To the right you will find two tables.
    - The top one valid for transformers with 7,5% tapping steps
    - The lower one valid for transformers with 10% tapping steps
- On –XX4 the series circuit is connected to the output transformer via S1 and S2, in this case to 5 and 12.
- The two secondary windings (one / coil) is connected in series by means of the current measuring transformer –XT1, in this case between 8 and 9.
- I we look at the top table, it can be seen that the use of shown connections will give 100% output voltage.
- In the table, it can be seen how to connect to get lower tappings.

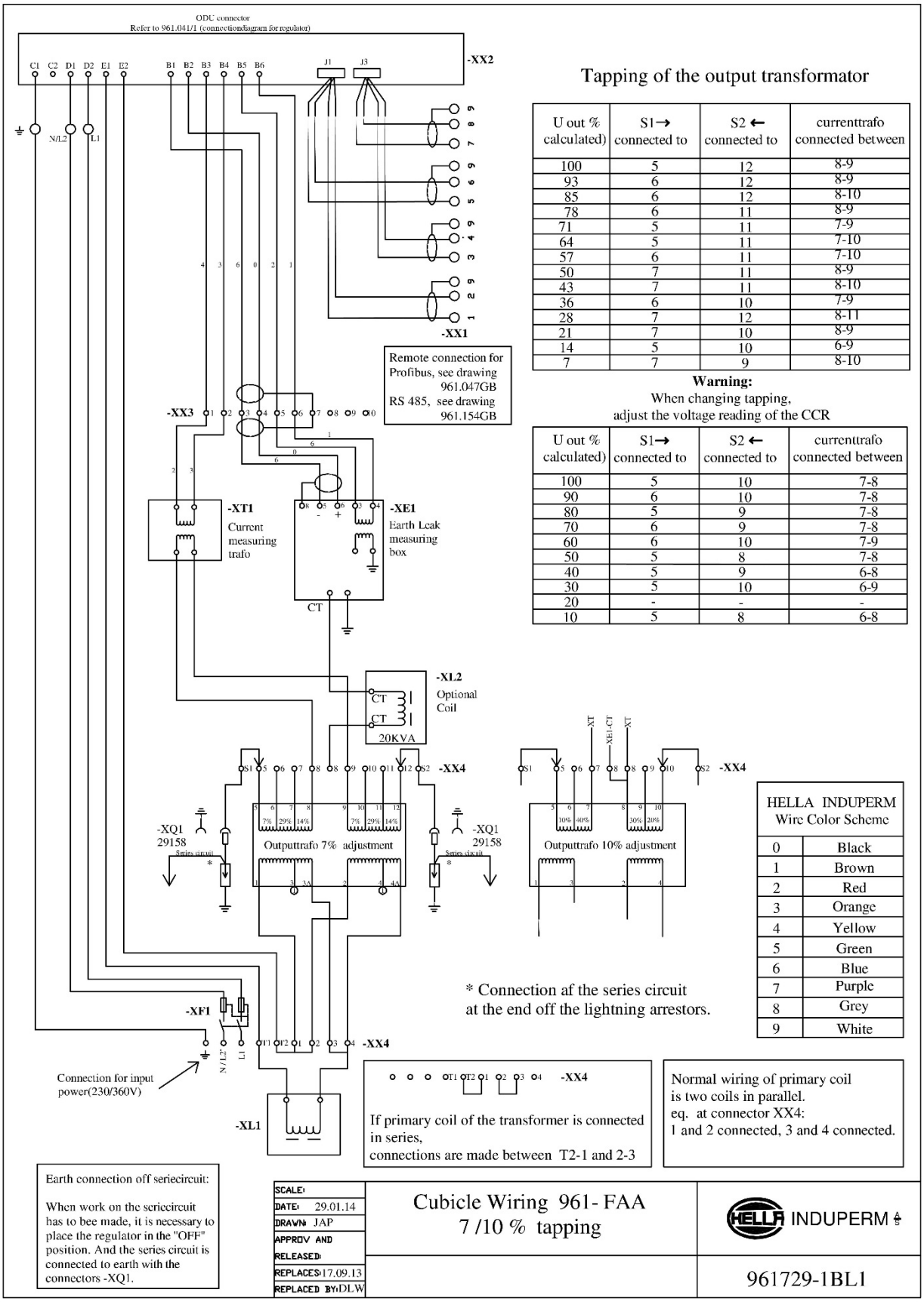

Tapping of the output transformator

U out % calculated)	S1→ connected to	S2 ← connected to	currenttrafo connected between
100	5	12	8-9
93	6	12	8-9
85	6	12	8-10
78	6	11	8-9
71	5	11	7-9
64	5	11	7-10
57	6	11	7-10
50	7	11	8-9
43	7	11	8-10
36	6	10	7-9
28	7	12	8-11
21	7	10	8-9
14	5	10	6-9
7	7	9	8-10

Warning:
When changing tapping,
adjust the voltage reading of the CCR

U out % calculated)	S1→ connected to	S2 ← connected to	currenttrafo connected between
100	5	10	7-8
90	6	10	7-8
80	5	9	7-8
70	6	9	7-8
60	6	10	7-9
50	5	8	7-8
40	5	9	6-8
30	5	10	6-9
20	-	-	-
10	5	8	6-8

HELLA INDUPERM Wire Color Scheme	
0	Black
1	Brown
2	Red
3	Orange
4	Yellow
5	Green
6	Blue
7	Purple
8	Grey
9	White

6 Remote Control

6.1 Standard RS485

The Mainboard includes all hardware and software for direct communication with a remote control system via RS485. The connection in the cubicle is as standard a set of terminals (-XX1) or a set of RJ45 connectors.

Description of the RS485 communication protocol:

General information:
19200 Baud, 8bit, no parity, 1 stop bit
CCR961 will only transmit after receiving a command or status inquiry.

Commands to CCR961.

1	2	3	4	5	6	7	8	9	10	11
Start	ID-High	ID-Low	CMD	Step	RWY	Mode	Time	CRC high	CRC low	End
@	0..9	0..9	S,W	0..7	1..9	1..F	1..F	0..F	0..F	*

Byte 1: Start character @
Byte 2 and 3: CCR node number, decimal figure 0 - 32.
Byte 4: Command = W. Status request = S
Byte 5: Step command, decimal figure 0 - 7
Byte 6: Circuit selector 1-4, not in use!
Byte 7: Normal mode = 0. Service mode = 1, Not in use!
Byte 8: Normal = 0. Set internal watch to 12.00 = 1
Byte 9 and 10 CRC hexadecimal figure between 00 and FF
Byte 11: Stop character *

Back indications from CCR961:

1	**2**	**3**	**4**	**5**	**6**	**7**	**8**	**9**	**10**	**11**	**12**	**13**	**14**
Start	ID-High	ID-Low	CMD	Step	RWY	Err1	Err2	Sta	Ana1	Ana2	Ana3	Ana1	Ana2
#	0	0	S,W	0..7	1..9	0..F	0..F	0..F	0..F	0..F	0..F	0..F	0..F

15	**16**	**17**	**18**	**19**	**20**	**21**	**22**	**23**	**24**
Ana3	Ana1	Ana2	Ana3	Ana1	Ana2	Ana3	CRC High	CRC low	End
0..F	0..F	0..F	0..F	0..F	0..F	0..F	0..F	0..F	*

Byte 1 : Start character #
Byte 2 and 3: CCR node number, decimal figure 0 - 32.
Byte 4: Answer to command = R. Answer to status request = S
Byte 5: Step indication, decimal figure 0 - 7
Byte 6: Circuit selector 1-4, not in use!
Byte 7: Error status 1: sum (0-F) of Lamp1 = 1, Lamp2 = 2, Emin1 = 4, Emin2 = 8
Byte 8: Error status 2: sum (0-3) of Imin = 1, Imax = 2
Byte 9: Key switch position: Remote = 2, Off or local = 0

Byte 10-12: Iout analog decimal value 0 - 999
Byte 13-15: Lamp analog decimal value 0 - 999
Byte 16-18: Uout analog decimal value 0 - 999
Byte 19-21: ISO analog decimal value 0 - 999
Byte 22-23: CRC hexadecimal figure between 00 and FF
Byte 24: Stop character *

Command to CCR961 CRC calculation:

^ = Xor
crc = data,1(start character)
crc = crc ^ data,2
crc = crc ^ data,3
etc. (until all bytes are included)
crc value, in Hex, is converted to 2 bytes Ascii

Example:

	Ascii:	Decimal:	Xor crc:
Start	@	64	64
ID high	0	48	64 ^ 48 = 112
ID low	9	57	112 ^ 57 = 73
Command	W	87	73 ^ 87 = 30
Step	3	51	30 ^ 51 = 45
RWY	1	49	45 ^ 49 = 28
Mode	0	48	28 ^ 48 = 44
Time	0	48	44 ^ 48 = 28

28 decimals = 1C Hex

1	2	3	4	5	6	7	8	9	10	11
Start	ID-High	ID-Low	CMD	Step	RWY	Mode	Time	CRC high	CRC low	End
@	0	9	W	3	1	0	0	**1**	**C**	*

Back indication examples:

Byte 7:
No failures = ascii 0 = decimal 48
Lamp failure 1 = ascii 1 = decimal 49
Lamp failure 2 = ascii 2 = decimal 50
ISO failure 1 = ascii 4 = decimal 52
ISO failure 2 = ascii 8 = decimal 56
Lamp failure 1 and ISO failure 2 = 1+8 = decimal 57
Lamp failure 2 and ISO failure 2 = 2+8 =ascii a = decimal 65

Byte 8:
No failures = ascii 0 = decimal 48
I min failure = ascii 1 = decimal 49
I max failure = asci 2 = decimal 50
Byte 9(Key switch position)
Remote = ascii 2 = decimal 50
Off or Local = ascii 0 = decimal 48

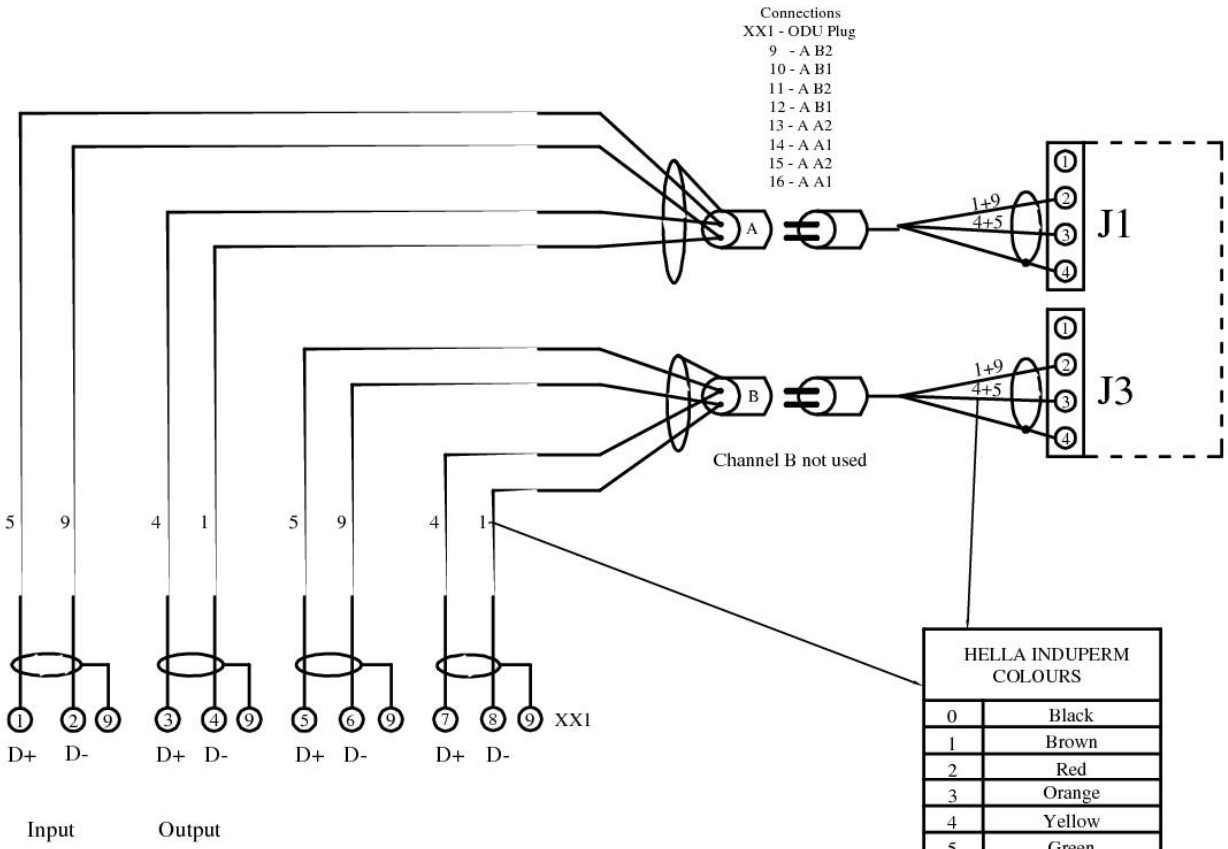

HELLA INDUPERM COLOURS	
0	Black
1	Brown
2	Red
3	Orange
4	Yellow
5	Green
6	Blue
7	Purple
8	Grey
9	White

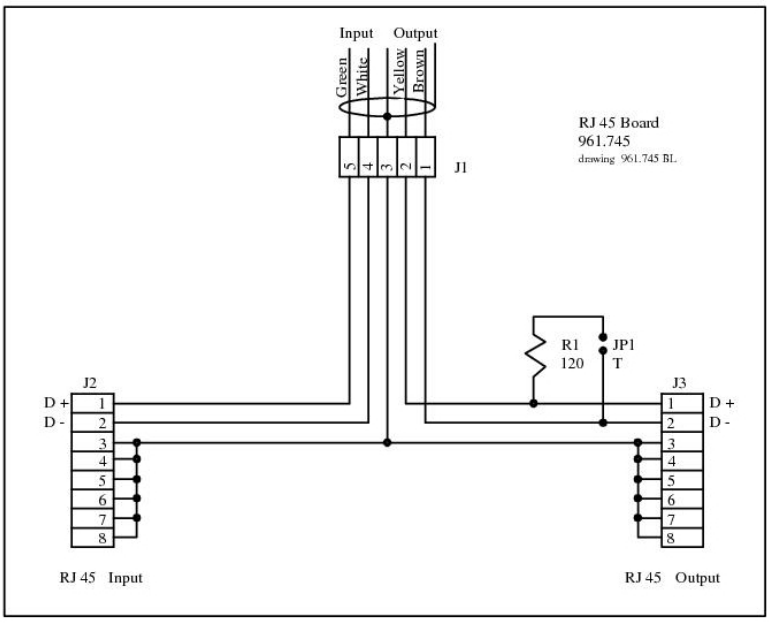

Connections on terminals –XX1 for RS485 based remote control communication with the above described protocol.
In the lower part of the picture is shown that, upon request, the terminals –XX1 can be exchanged to two nos. RJ45 connector houses, mounted on the board 961.745

6.2 Redundant Profibus

When a Profibus communication interface to the remote control system is required, the CCR Module will have a Redundant Profibus Board added internally, and this will then communicate with the CCR Main board in a RS485 protocol.
The connections in the CCR cubicle is a set of terminals (-XX1).

Description of PROFIBUS

The Profibus module can be used as a single or redundant interface to the Main Board via RS485. The Module is constructed and based on two nos. Siemens ASIC circuit LSPM2, which fulfils the Profibus format according to IEC 61158.

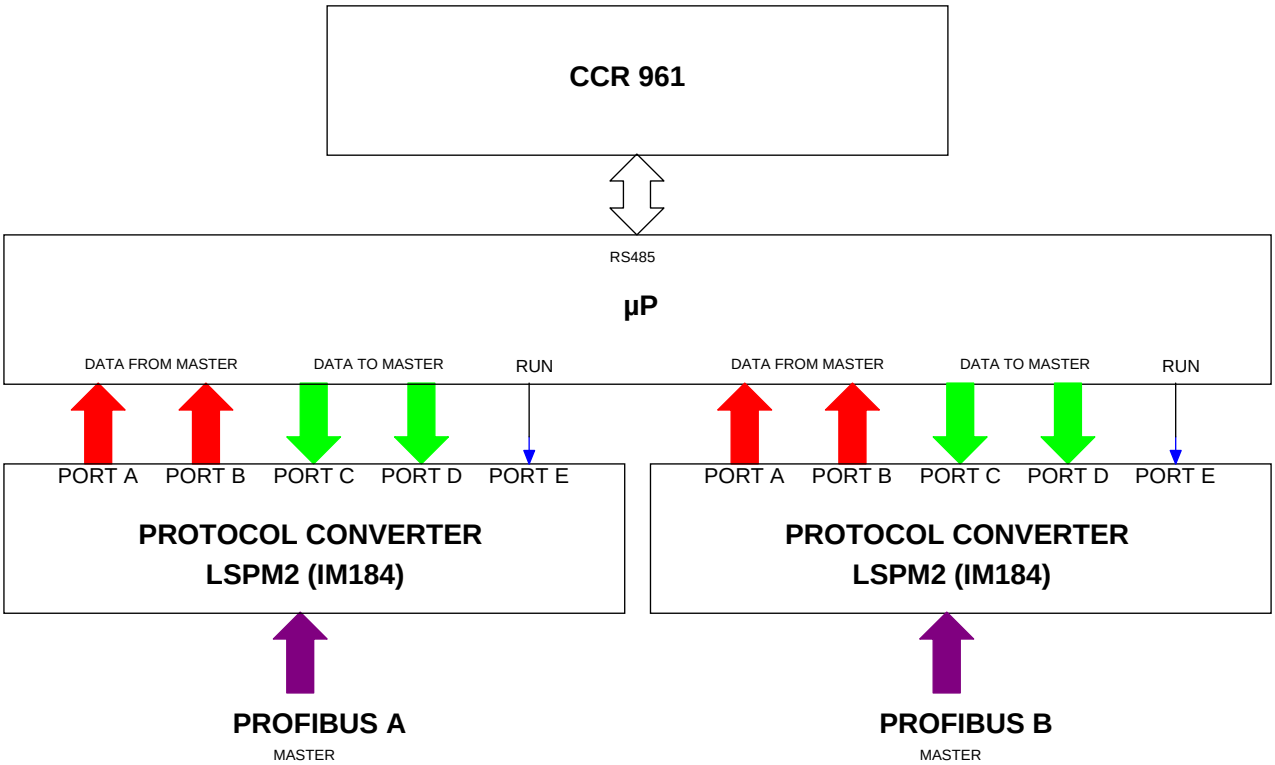

Redundant use:

Port PB.0 **Master Bit** determinates which channel (A or B) is controlling the CCR.

The detection of the Master bit is edge triggered (edge sensitive).
The channel with the latest change from 0 to 1 is the controlling channel. This is also the case if the Master bit is 1 from both channels.
If the Master bit in both channels is permanently set to 1, and there is a failure on one Chanel, there is a risk that the communication will fail, as no shift is detected in the master bit.

Response time:

The data communication between Profibus board and main board is stroke controlled. The Profibus module will send data to the main board with fixed intervals of 200mS and the main board will send data to the Profibus module with fixed intervals of 300mS.
The total time from data received from the Profibus until a response is placed in the buffer on the Profibus module, which can be read via the Profibus, will vary from app. 10mS to app. 510mS. (200mS + 300mS + 2 x 5mS (µP program cycle).

The individual functions are described in the following table and examples.

FROM master			
IM184	**Bit**		
Port			
PA	0	Step bit 0	
	1	Step bit 1	
	2	Step bit 2	
	3		
	4		
	5		
	6		
	7	Status req.	if = 1 cancel step info and set "tx status"
PB	0	Master bit	positive edge trig !!
	1		
	2		
	3	Set time = 12.00	if = 1 set ccr time to 12.00 (noon)
	4	0=tx status 1=tx analog	
	5	analog pointer 0	(Iout=11H, Lamp=31H, Uout=51, E=71H)
	6	analog pointer 1	
	7	analog pointer 2	
TO master			
IM184	**Bit**		
Port			
PC	0	Step bit 0	
	1	Step bit 1	
	2	Step bit 2	
	3		
	4		
	5		
	6		
	7	Lamp error 1	
PD	0	Lamp error 2	
	1	E min1	
	2	E min2	
	3	I min	
	4	I max	
	5	Remote	
	6		
	7	0=status	
PC	0	12 bit analog lsb	
	1	12 bit analog	
	2	12 bit analog	
	3	12 bit analog	
	4	12 bit analog	
	5	12 bit analog	
	6	12 bit analog	
	7	12 bit analog	
PD	0	12 bit analog	
	1	12 bit analog	
	2	12 bit analog	
	3	12 bit analog msb	
	4	analog pointer 0	(Iout=8xH, Lamp=9xH, Uout=ax, E=bxH)
	5	analog pointer 1	(analog pointer + bit7)
	6	analog pointer 2	
	7	1=analog	

Explanations to the Profibus protocol.

- Port PA and PB is receiving the information from MASTER, while port PC and PD delivers the signals to MASTER.
- Bit PA-7, Status req. can be set to 1, to enable a request of tx status or tx analog without sending a step command at the same time.
- If Bit PB-4 is set to 1, the request is for analog values. Which analog value requested is set by means of the Bits PB 5-6-7.
- Port PC and PD are shown on the previous page, both for tx status and for tx analog.
  In case of tx status step indications, Warnings and Alarms are send.
  In case of tx analog values for Iout, Lamp Failure, Uout or Isolation resistance can be send.
  The actual analog value in question can be determinated by means of the Bits PD 4-5-6.
- The analog value is given as follows:

1. Iout, Lamp failure and Uout

Value is given only in PC:

Bit	7	6	5	4	3	2	1	0
Binary value	128	64	32	16	8	4	2	1

Iout: Binary value / 10 = Iout (A)
Uout: Binary value / 100 = Uout (KV)
Lamp failure: Binary value = number of faulty lamps

2. ISO value (Resistance to ground).

Profibus master is sending the following data bit to CCR:
PA: 00000010 Step 2
PB: 01110001 master, tx analog value type 3 ~ ISO value

The analog value is given in KΩ by means of 3 digits: 2 significant digits + number of zero's

	Port D								Port C							
Bit no:	7	6	5	4	3	2	1	0	7	6	5	4	3	2	1	0
Value:	Analog pointer				2048	1024	512	256	128	64	32	16	8	4	2	1

Example:
250K ~ 251: PD: xxxx0000 PC: 11111011
260K ~ 261: PD: xxxx0001 PC: 00000101
56K ~ 560: PD: xxxx0010 PC: 00110000
1,7M ~ 173: PD: xxxx0000 PC: 10101101

Profibus data <u>examples</u>:

Step = 2 (normal)

Profibus master will send flg. data bit to CCR:
PA: 00000010 step 2
PB: 00000001 master, Status req.

Profibus module will send flg. data bit to master:
PC: 00000010 step 2

PD: 00100000 remote

Step = 2 (Emin1 alarm, Emin2 alarm (Emin = ISO))

Profibus master will send flg. data bit to CCR:
PA: 00000010 step 2
PB: 00000001 master, Status req.

Profibus module will send flg. data bit to master:
PC: 00000010 step 2
PD: 00100110 remote, Emin1 alarm, Emin2 alarm

Step = 2 (Imin alarm)

Profibus master will send flg. data bit to CCR:
PA: 00000010 step 2
PB: 00000001 master, Status req.

Profibus module will send flg. data bit to master:
PC: 00000000
PD: 00101000 remote, Imin alarm

Step = 2 (Imax alarm)

Profibus master will send flg. data bit to CCR:
PA: 00000010 step 2
PB: 00000001 master, Status req.

Profibus module will send flg. data bit to master:
PC: 00000000
PD: 00110000 remote, Imax alarm

Analog values:
I-out:
Step = 2
Profibus master will send flg. data bit to CCR:
PA: 00000010 step 2
PB: 00010001 master, tx analog value type 0 (Iout)

Profibus module will send flg. data bit to master:
PC: 00011001 25 ~ Iout 2.5A
PD: 10000000 analog value type 0 ~ Iout

Lamp failure:
Step = 2
Profibus master will send flg. data bit to CCR:
PA: 00000010 step 2
PB: 00110001 master, tx analog value type 1 ~ lamp failure

Profibus module will send flg. data bit to master:
PC: 00000001 1 ~ lamp failure, one faulty lamp
PD: 10010000 analog value type 1 ~ lamp failure

U-out:
Step = 2
Profibus master will send flg. data bit to CCR:
PA: 00000010 step 2
PB: 01010001 master, tx analog value type 2 ~ Uout

Profibus module will send flg. data bit to master:
PC: 00110000 48 ~ Uout = 0.48KV
PD: 10100000 analog value type 2 ~ Uout

ISO value (E):
Step = 2
Profibus master will send flg. data bit to CCR:
PA: 00000010 step 2
PB: 01110001 master, tx analog value type 3 ~ ISO

The isolation value is given in KΩ by means of 3 digits: 2 significant digits + number of zero's (factor 10)
The value is displayed as a binary value on port C + the first 4 bits in port D.

Example 15KΩ: 1 5 0 = 0000 1001 1001

Profibus module will send flg. data bit to master:
PC: 10010110 150
PD: 10110000 analog value type 3 ~ ISO

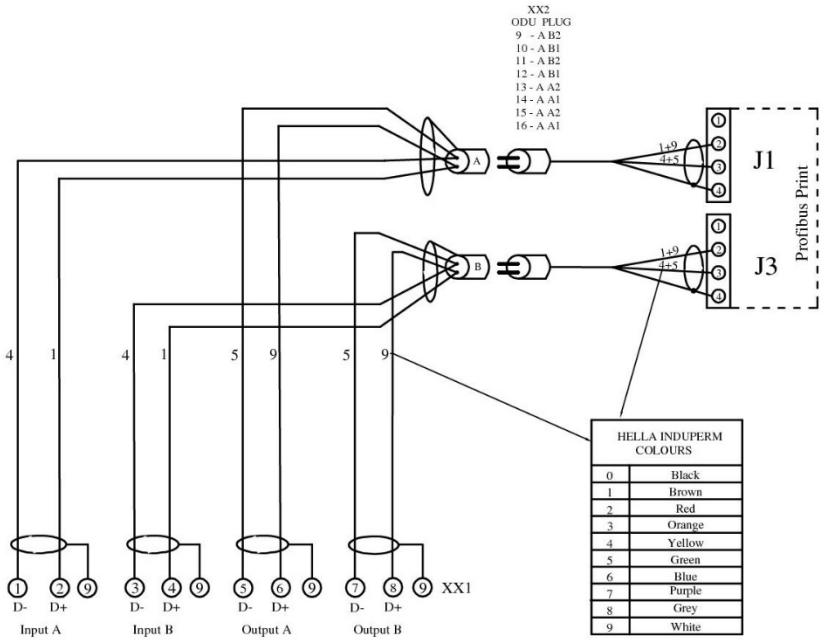

Profibus Terminals

Connection diagram for Profibus to the terminals –XX1.

6.3 Parallel control

When a parallel interface is required, a separate parallel interface board is placed in the CCR cubicle, and this board will communicate with the CCR module via the RS485 serial bus.
The latest parallel version is shown below:

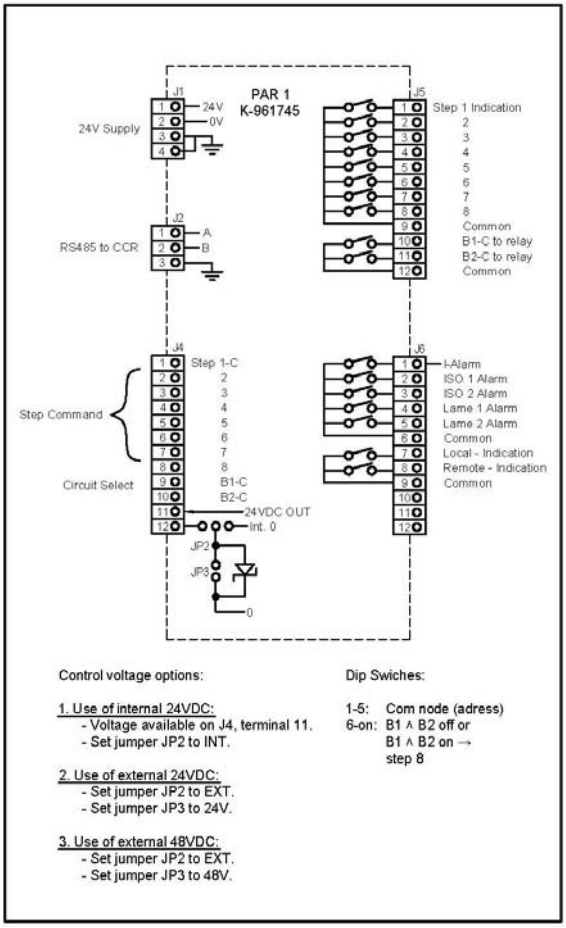

SCALE:	Parallel Interface	HELLA INDUPERM AS
DATE: 11.05.2015		
DRAWN: MBS		
APPROV AND RELEASED:		
REPLACES:	CCR 961	961.745BL-GB
REPLACED BY:		

F:\961\Tegninger\961745BL-GB skilt til dækplade

The connections to the Parallel Interface board is done via the connectors J4, J5 and J6. These connectors are designed for max. 1mm2 flexible wire.

If heavier wire is used we can offer a solution with 25 nos. terminals for 2,5mm2 cable.
This row of terminals is mounted in the front of the CCR for easy access and is shown below.
The terminals with pre-mounted cable connections to the connectors J4, J5 and J6 can be ordered separately as type 961.629.

Optional Remote control terminals for CCR 961 Parallel interface
Terminal set incl. connectors for parallel interface board Hella Induperm A/S type 961.629

Terminal no.	Function	Wire color	Wire connected to:	
1	Step 1 command (24V or 48VDC possible)	white	PAR1-J4-1	
2	Step 2 command	brown	PAR1-J4-2	
3	Step 3 command	green	PAR1-J4-3	
4	Step 4 command	yellow	PAR1-J4-4	
5	Step 5 command	grey	PAR1-J4-5	
6	Circuit selector B1 on command	pink	PAR1-J4-9	
7	Circuit selector B2 on command	blue	PAR1-J4-10	
8	Step / CS command common (0V)	red	PAR1-J4-12	
9	Step 1 indication	black	PAR1-J5-1	
10	Step 2 indication	violet	PAR1-J5-2	
11	Step 3 indication	grey/pink	PAR1-J5-3	
12	Step 4 indication	red/blue	PAR1-J5-4	
13	Step 5 indication	white/green	PAR1-J5-5	
14	Step indication common	brown/green	PAR1-J5-9	
15	Current alarm	white/yellow	PAR1-J6-1	
16	ISO alarm 1	yellow/brown	PAR1-J6-2	
17	ISO alarm 2	white/grey	PAR1-J6-3	
18	Lamp failure 1	grey/brown	PAR1-J6-4	
19	Lamp failure 2	white/pink	PAR1-J6-5	
20	Local indication	pink/brown	PAR1-J6-7	
21	Remote indication	white/blue	PAR1-J6-8	
22	Alarm Indication common	brown/blue white/red	PAR1-J6-6 PAR1-J6-9	
23	Circuit selector B1 on indication	yellow	CS-board-4	B1 / B2 indications only in use for CCR's with Circuit Selector
24	Circuit selector B2 on indication	grey	CS-board-5	
25	Circuit selector indication common	pink	CS-board-6	

6.4 Ethernet IP addressable

The IP solution is similar to the solution for Parallel control, by mounting a special box in the CCR cubicle that will convert the IP communication to RS485 towards the CCR.

The Protocol and set-up for this solution can be obtained in a separate document.

Ethernet IP addressable Lan-com interface.

6.5 Dip-switch settings

There are dip switches on the Main Board and on the Profibus Board (only for Profibus solutions). The drawing below shows the setting of the dip-switches, both on the Main Board and on the Profibus Board.
In solutions with a parallel remote control interface, the address on both Main Board and on the Parallel Board is normally set to 1.

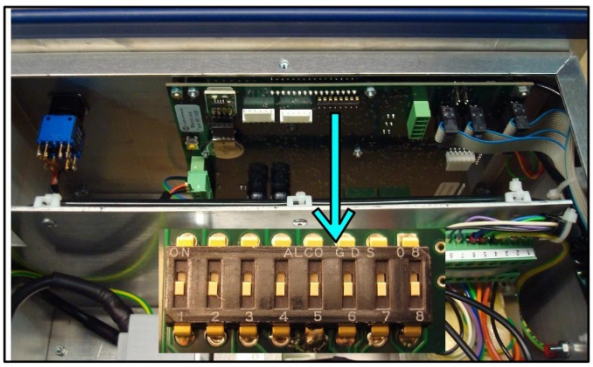

MainBoard seen from inside Module

Switch	RS485-951	RS485-961	Profibus
1	RS 485 Adress	RS 485 Adress	Not in use set on Profibus Board
2			
3			
4			
5			
6	OFF	ON	OFF
7	ON	OFF	OFF
8	OFF	OFF	OFF

RS 485 node address -Binary-

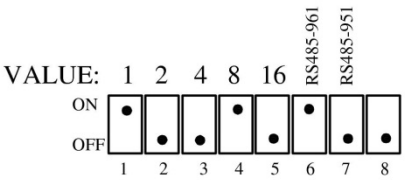

DIP switch located on the Mainboard
Example: node address set to 9

Profibus Adressing (BCD) on ProfibusBoard

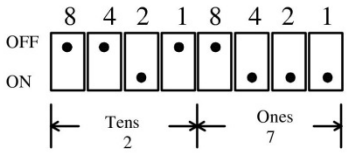

● (Eksample: Adress 27)

SCALE:	CCR 961	HELLA INDUPERM AS
DATE: 10-02-2014		
DRAWN: DLW		
APPROV AND RELEASED:		
REPLACES:	DIP-switch, MainBoard	961.508BL
REPLACED BY:		

7 Cut-Out devices

7.1 Standard FAA connector type

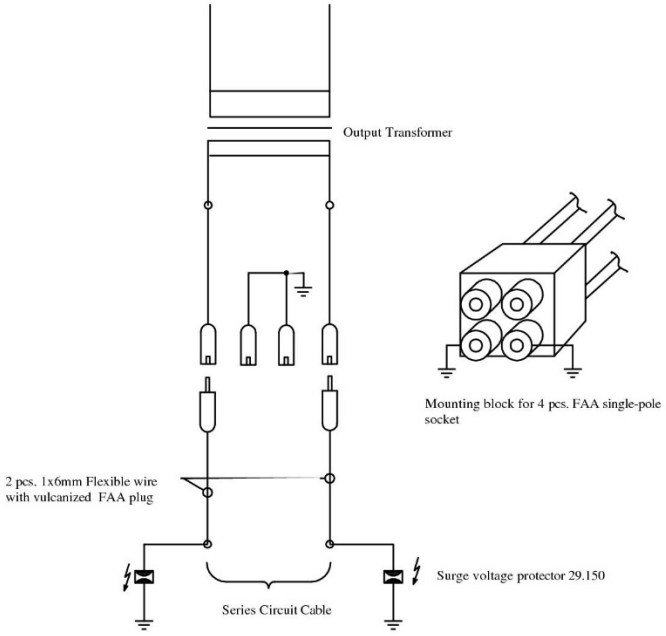

The Cut-out device includes the following parts:

- The Aluminum device with four nos. female FAA high Voltage connectors.
  Two of the plugs are connected to each end of the output transformer (S1 and S2 on terminals –XX4), and two are connected to ground.
- Two nos. flexible high voltage cable, length app. 0,8 m, with vulcanized FAA high voltage male connector in one end. The other end is connected to the series circuit on the lightning arrestors.

Function:
In normal operation are the two male plugs mounted in the upper female FAA connectors, and in this way connected to the output transformer. For service, or during work on the series circuit, the two male plugs are mounted in the grounded female plugs.
Now the CCR is disconnected from the series circuit, and the series circuit is grounded.

Cables and plugs are designed for 20A and max 5KV.

IMPORTANT:
The plugs are only to be moved with the CCR key switch in position OFF (=AUS).

7.2 Key operated safety type

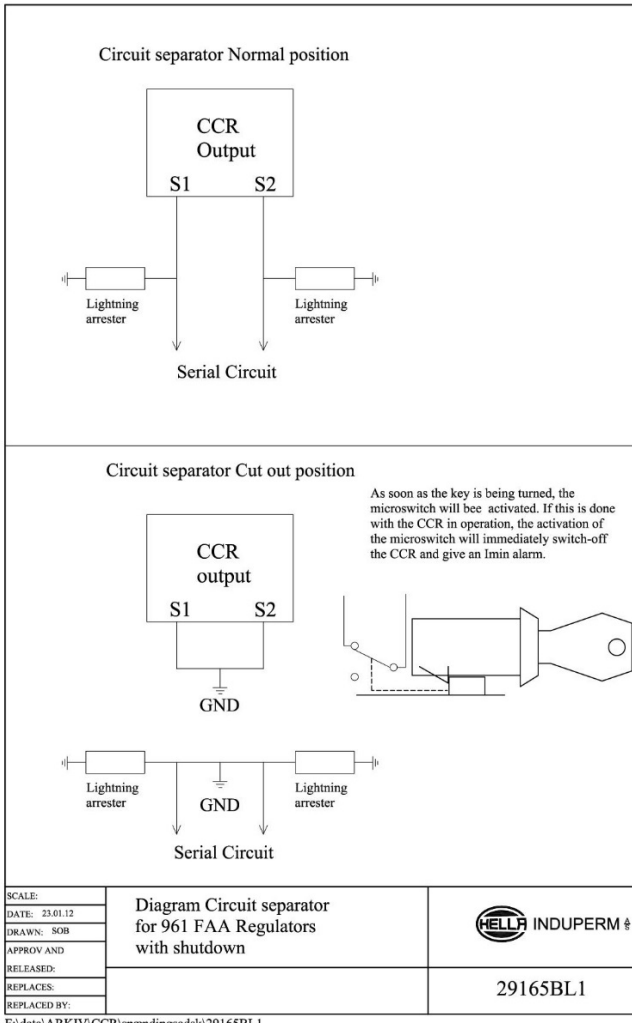

When the key is turned the front of the Cut-out devise (with its high voltage connector) can be pulled out and turned 180° to change the function.

THE CUT-OUT DEVICE MUST ONLY BE OPERATED WHEN THE CCR IS SWITCHED OFF!

8 Maintenance and Trouble shooting

8.1 Regularly Control

There is no direct demand for certain maintenance to be done on the CCR, but in the following is given a few recommendations, which could improve both MTBF, lifetime of the equipment as well as safety for maintenance personnel.

Every 2. Year:

- The series circuit is disconnected from the CCR and the series circuit isolation is measured (Megger). The value is compared with the latest measured value in the CCR.
- The CCR includes supervision of the series circuit current, Imin (open circuit) and Imax (most likely thyristor failure). These function is not often in use and can be tested as follows:
    - The current in the lowest intensity step is adjusted to 1,0 A, Switch on in step three, wait some seconds and then switch to step one. The CCR must switch-off with Imin alarm within 1 sec.
    - The Imax alarm is adjusted to 5,1A. The CCR is switched on in the lowest step, wait some seconds and the switch to the highest step. The CCR must switch-off with Imax alarm within app. 4 sec.

Every 5 years:

- The CCR is cleaned inside with a vacuum cleaner (CCR CUBICLE IS POWERED OFF!), and all components are visually controlled for changes in color etc.
- All power connections are controlled by means of a Thermo camera.

8.2 Safety instructions

Before any service work is done in the CCR cubicle, the power supply must be switched off.
If measurement have to be done with power on, the measurement must be via a measuring transformer.
Remember, that ISO measurement on the series circuit is performed with 500VDC, and a good circuit is like a capacitor, and can keep the voltage long after power is removed, therefor always ground the series circuit.

Before any work is done on the series circuit:

- The key selector on the CCR is set to “OFF”
- The cut-out is activated (FAA plugs to ground or Cut-out selector to “Cut-Out”)
- The CCR front door is clearly marked with a sign “Work is done on the series circuit”

8.3 List of possible failures

No.	Failure	Cause	Correction
1	Imin	Open circuit	Repair circuit
2		Many faulty lamps (open secondary sides on SIT)	Change lamps
3		Cut-out device activated	Set to normal position
4		CCR module failure	Change module
5			
6	Imax	Thyristor unit shorted	Change module or Thyristor
7		Too much load change in series circuit due to selector switch or single lamp control	Adapt
8		Flash-over on Lightning Arrestors	Change Lightning Arrestors
9	Display saying “Default values”	Memory Board missing in CCR Module	
10		Memory Board from old Software, set default data (5)	
11		Faulty Memory Board	Change Memory Board
12			
13	No step back - indication	Too many fault lamps in circuit	Change lamps
14		The series circuit have been expanded	Change tapping
15	No indications in Display	Power to the cubicle is missing	Repair the supply
16		Fuse in Module faulty	Change fuse or change module
17			
18			
19			
20			
21			
22			
23			

List of spares

Pos.	Description	No.		
1	40A CCR Module 230/400V Profibus	961060		
2	110A CCR Module 230/400V Profibus	961070		
3	60A CCR Module 230/400V Profibus	961080		
4	60A CCR Module 230/400V RS-485	961085		
5	40A CCR Module 230/400V RS 485	961090		
6	110A CCR Module 230/400V RS 485	961100		
7	Additional coil for ISO box 961121 (Uout > 2KV)	961105		
8	ISO box for 961, 42V (ISO-Interval)	961121		
9	ISO box for 961,42V,Ver.2 (ISO-continuosly)	961124		
10	Mainboard 961 V4:120707	961505		
11	Profibus Board 961	961515		
12	Memoryboard til 961	961535		
13	Trigger Board 961 V4	961555		
14	Tool set CCR 961 (incl. 961360)	961361		
15	Cable 961 current measurement	961400		
16	Monitor Kit, Diagram + cable + Dongle	961-MON		
17	Lightning arresstor 1,2KV 30gr.	29.150.211		
18	Lightning arrestor 2,4KV 30gr.	29.150.221		
19	Lightning arrestor 3,6KV 30gr.	29.150.231		
20	Lightning arrestor 5KV 30gr.	29.150.241		
21	Coil 1,4mH 60A	11920		
22	Coil 2mH 28A	11921		
23	Coil 60A - 2mH	11936		
24	Coil 40A (for Module)	11941		
25	Coil 110A (for Module)	11942		
26	Coil 60A (for Module)	11943		
27	Current transformer 6,6A/0,22A 1m PLT	11923		
28	Output Trafo 5KVA360V 7,5% tap	P-950100		
29	Output Trafo.7,5KVA360V 7,5% tap	P-951101		
30	Output Trafo.10KVA360V 7,5% tap	P-950102		
31	Output Trafo.12,5KVA360V 7,5% tap	P-950103		
32	Output Trafo.15KVA360V 7,5% tap	P-950104		
33	Output Trafo.20KVA360V 7,5% tap	P-950105		
34				
35				