795 LED Lights

USER MANUAL

GB

LIST OF CONTENT

1. General information

1.1 The layout of this manual

This manual includes technical information about the Hella Induperm range of 795 LED fixtures. The range of LED fixtures is constructed and manufactured of standard parts mostly produced in-house. A large part of the mechanical construction, the LED modules as well as the electronic are used in a number of Hella and Hella Induperm light fixtures. This reduces the necessary amount of spares in an airport.

1.2 The use of the manual

The manual is intended to be used for installation, operation, maintenance of the 795 LED, as well as for purchase of spare parts.

1.3 Manufacturer information

The 795 LED are developed and manufactured by:

HELLA INDUPERM A/S
Københavnsvej 1
DK-4800 Nykøbing Falster
DENMARK

Tel.: +45 5486 0200
Fax.: +45 5486 0389
E-Mail: induperm@induperm.dk
Homepage: www.induperm.dk or www.hella.com/airportlighting

1.4 Document information

Version	Date	Author	Approved
A –First release	2014.7.31	Ole Lund-Hermansen	OLH

Version	Date	Author	Approved	Comments

This manual includes a number of safety instructions, but national instructions as well as IEC 61820, Annex C, must be observed.

Hella Induperm A/S reserves the right to changes without notice.
It is not allowed to copy this manual without permission.

2. Overall 795 LED information

2.1 Relevant standards

The range of 795 LED fixtures is constructed, manufactured and tested to meet the requirements in ICAO annex 14, 5.3.17.7-8 and in FAA AC 150/5345-46B, Table 3 for omnidirectional elevated lights.

2.2 Main data

The 795 LED light fixtures uses the same technology and main parts as used in other Hella Induperm elevated LED light fixtures.
Designed to meet all environmental conditions given in FAA AC No. 150/5345-46D for relevant applications.
Standard height app. 355mm, but other heights can be supplied upon request.
Standard 100% input current is 6,6A, but the light fixture can be supplied for 230VAC as well (with a built-in transformer).

The 795 LED light fixtures can be supplied in two different versions:

795 LED-LI:
In this version the LED is powered through a built-in transformer (current or voltage), and designed for only one intensity step. It can only be dimmed a little, which means that the light output is almost constant even with changes in input current (see curves below).

795 LED-MIRE:
In this version the LED is powered through the HELLA electronic board for true RMS / DC converter, and in this version the 795 LED light fixture can be dimmed in 5 light intensity steps according to ICAO (see curves below).

Features:
- The outside of the outer glasses is smooth and needs no cleaning
- No levelling and adjustment need for omnidirectional fixtures.
- Only fully corrosion proof components are used.
- Finished in stove enamel aviation yellow, RAL 1028
- Two types of breakable couplings available:
  - Type A for 2” thread
  - Type C for Ø-2” (60mm) pole mounting
- Shipping details for **10** fixtures: 22Kg / 0,1 m3

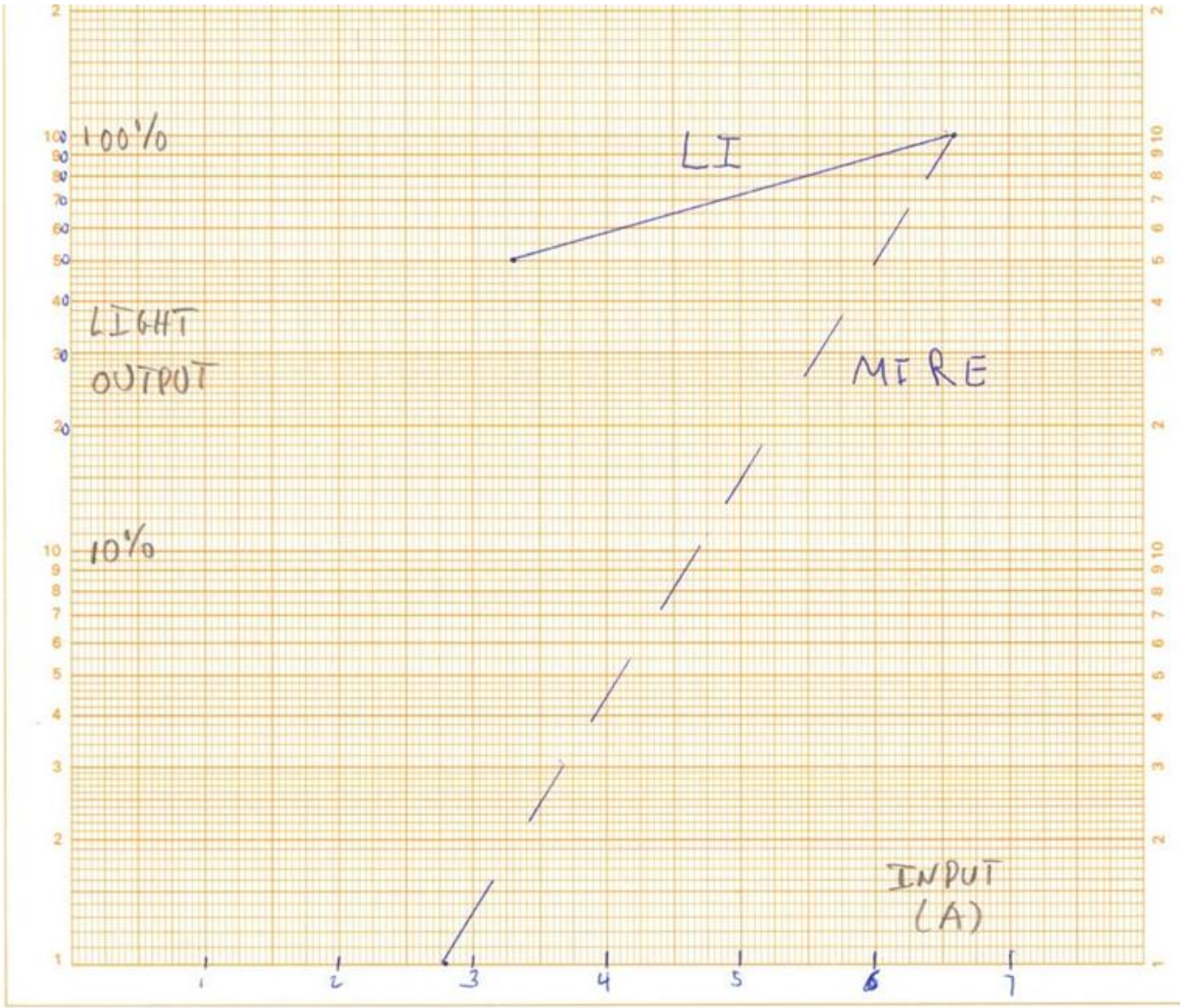

Light output intensity as function of input (here shown for 6,6A current input)

2.3 795 LED variants

a. Input
795 LED is as mentioned before constructed for nominal 6,6A series circuits, but can be supplied for parallel supply (120 or 230VAC) is required.

b. LI or MIRE
If no dimming is required the LI version is recommended, otherwise specify the MIRE version.

c. Height of fixture.
The 795 LED light fixture can upon request be quoted in customer specified heights.

d. List of variants.

This Manual is valid for the following 795 LED variants:

Hella Induperm Type No.	Hella Type No.	Application	Description	Colour
795.LED-MIRE.c/c.4.A	011.497-107	Runway Edge, dimmable	REH-Elev.-clear/clear-LED-breakable coupling A, 0,4m FAA cable	
795.LED-MIRE.c/c.4.C	011.497-197	Runway Edge, dimmable	REH-Elev.-clear/clear-LED-breakable coupling C, 0,4m FAA cable	
795.LED-MIRE.c/y.4.A	011.497-117	Runway Edge, dimmable	REH-Elev.-clear/yellow -LED-breakable coupling A, 0,4m FAA cable	
795.LED-MIRE.c/y.4.C	011.497-137	Runway Edge, dimmable	REH-Elev.-clear/yellow-LED-breakable coupling C, 0,4m FAA cable	
795.LED-MIRE.r/g.4.A	011.497-157	Threshold / End, dimmable	THR/END-Elev.-green/red-LED-breakable coupling A, 0,4m FAA cable	
795.LED-MIRE.r/g.4.C	011.497-177	Threshold / End, dimmable	THR/END-Elev.-green/red-LED-breakable coupling C, 0,4m FAA cable	
795.LED-MIRE-b.4.A	011.497-207	Taxiway Edge, dimmable	TEL-Elev.-blue-LED -breakable coupling A, 0,4m FAA cable	
795.LED-MIRE-b.4.C	011.497-217	Taxiway Edge, dimmable	TEL-Elev.-blue-LED breakable coupling C, 0,4m FAA cable	
795.LED-LI-b.4.A	011.494-207	Taxiway Edge, fixed intensity	TEL-Elev.-blue-LED -breakable coupling A, 0,4m FAA cable	
795.LED-LI-b.4.C	011.494-217	Taxiway Edge, fixed intensity	TEL-Elev.-blue-LED breakable coupling C, 0,4m FAA cable	
795.LED-LI-r.4.C	Not yet done	Taxiway Edge, fixed intensity	TEL-Elev.-red-LED breakable coupling C, 0,4m FAA cable	
795.LED-LI-r.4.A	Not yet done	Taxiway Edge, fixed intensity	TEL-Elev.-red-LED -breakable coupling A, 0,4m FAA cable	
795.LED-LI-g.4.C	Not yet done	Taxiway Edge, fixed intensity	TEL-Elev.-green-LED breakable coupling C, 0,4m FAA cable	
795.LED-LI-g.4.A	Not yet done	Taxiway Edge, fixed intensity	TEL-Elev.-green-LED -breakable coupling A, 0,4m FAA cable	
795.LED-LI-cl.4.C	Not yet done	Taxiway Edge, fixed intensity	TEL-Elev.-clear-LED breakable coupling C, 0,4m FAA cable	
795.LED-LI-cl.4.C	Not yet done	Taxiway Edge, fixed intensity	TEL-Elev.-clear-LED breakable coupling A, 0,4m FAA cable	
795.LED-LI-y.4.A	Not yet done	Taxiway Edge, fixed intensity	TEL-Elev.-yellow-LED breakable coupling C, 0,4m FAA cable	
795.LED-LI-y.4.C	Not yet done	Taxiway Edge, fixed intensity	TEL-Elev.-yellow-LED breakable coupling A, 0,4m FAA cable	

2.4 Warranty limitations

The manufacturer or his representative cannot be held responsible for failures and malfunctions, if the instructions in this manual are not followed.
The 795 LED will meet all specifications when installed and operated as specified.
Hella Induperm A/S has only the responsibility to replace faulty parts if construction, production or component failure is proven.

3. 795 LED DESCRIPTION

3.1 General Information

Hella Induperm 795 LED light fixtures are constructed mainly by using standard components from Hella Induperm standard program of elevated fittings.
The light output is omni-directional, and in colors as indicated in the table 2.3d.

The fitting has a breakable coupling, designed for 2” (60mm) stake mounting (Type C) or with 2” thread stub (Type A).
The light fixture is designed for an expected lifetime for the LED´s of 50.000 Hours.

3.2 795 LED electronics

The driver electronic for the LED modules in the MIRE version is identical to the electronics used in Hella inset lights and in Hella Induperm elevated unidirectional lights for Approach, Siderow, Threshold, Threshold Wing bar and for Runway End light.
The electronic will transfer the RMS value of the 6,6A series circuit current into the necessary LED current. The electronic is informed about the LED current needed from the EPROM memory on the LED module.
In the LI version the driver electronic is exchanged with a transformer inclusive necessary rectifier circuit. The transformer can be a current transformer (6,6A input) or a voltage transformer (120 or 230VAC input)

3.3 Light output performance

Three parameters are essential for the correct light output.
The color of the LED output together with the yellow front glass defines the correct color.
The LED light output together with the lens on each LED defines the correct light distribution.

4. 795 LED installation

4.1 Unpacking the light fixtures

The 795 LED units are supplied in individual boxes.
Please make sure that nothing is broken before starting installation.

4.2 Installation in the field

The light fixture can be installed on a base plate or tube.
The supply to the light fixture can be connected via screw terminals or via standard 2-pole FAA connector (Style 1).

5. Maintenance

Besides cleaning the surface of the lens, no maintenance is required.

6. Specifications

- Light output according to ICAO and FAA
- 100% current 6,6A, 120VAC or 230VAC, power consumption app. 7W
- Expected LED lifetime of 50.000 H
- Standard overall height app. 355mm. Other heights upon request.
- Weight app. 2,2 KG
- Ingress Protection IP 54
- Supplied with breakable coupling type A (2” Thread) or C (60mm tube)
- Connection with one or two FAA plugs Style 1 or terminals
- Finished in stove enamel aviation yellow RAL 1028
- Can be supplied with base plate (optional)

7. Assembling drawings with belonging List of spares

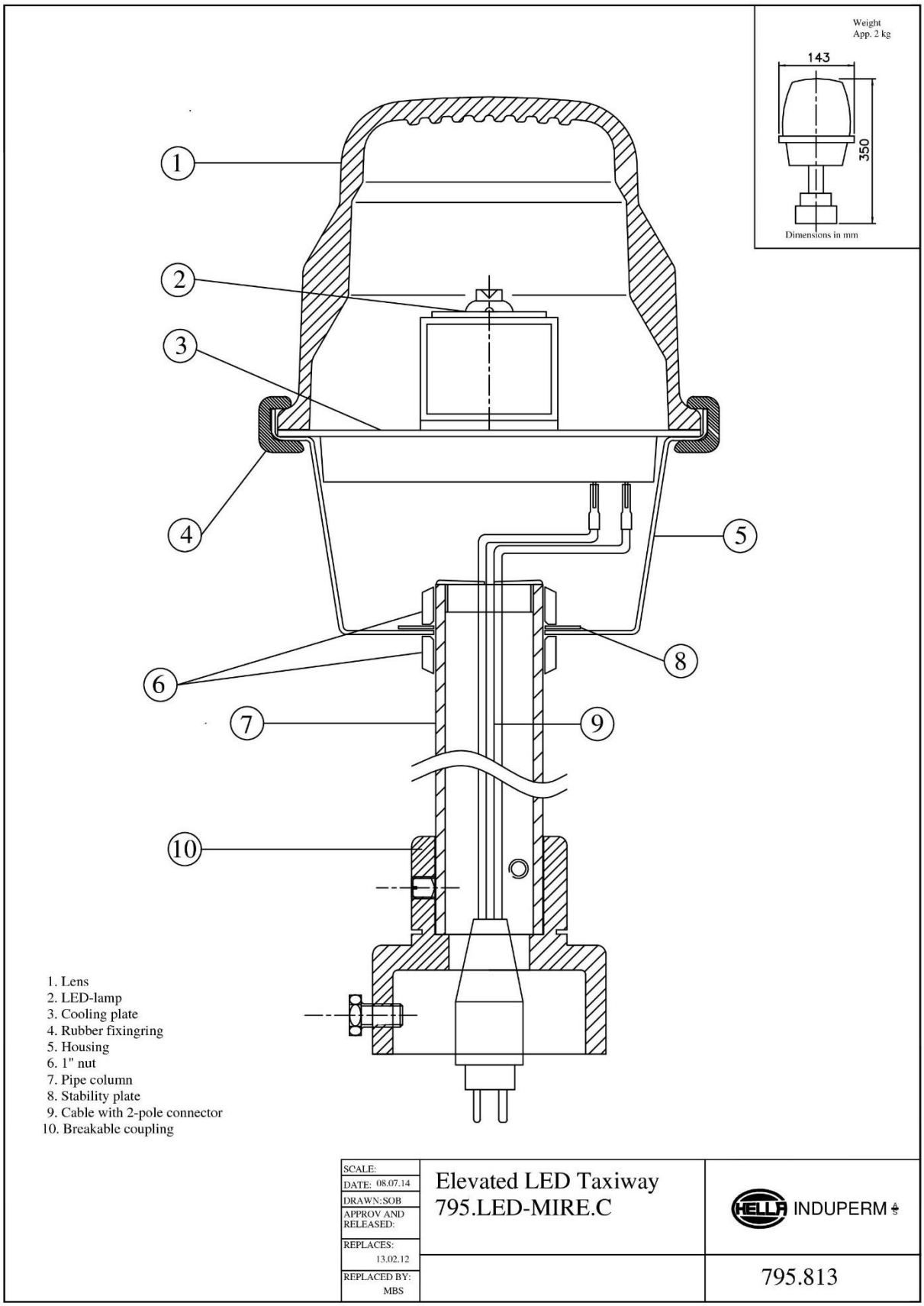

ITEM See 795.813	DESCRIPTION	INDUPERM TYPE No.	No./UNIT
795.813 1a	Lens, Blue	P-382.002	1/0
795.813 1b	Lens, Clear	P-382.021	1/0
795.813 1c	Lens, Green	P-382.023	1/0
795.813 1d	Lens, Yellow	P-382.012	1/0
795.813 2	LED (included in item 3)		1
795.813 3	Plate with LED and electronics	824.531	1
795.813 4	Rubber fixingring	790.041	1
795.813 5	Housing	795.011/1	1
795.813 6	1" nut	P-900.510	2
795.813 7	Pipe Column L=160mm	790.007.001	1/0
795.813 7	Pipe Column L=115mm	790.007.011	1/0
795.813 7	Pipe Column L=110mm (standard)	790.007.021	1/0
795.813 7	Pipe Column L=145mm	790.007.031	1/0
795.813 7	Pipe Column L=200mm	790.007.041	1/0
795.813 7	Pipe Column L=68mm	790.007.051	1/0
795.813 8	Stability plate	795.710	1
795.813 9	Option: Cable with 2-pole FAA-connector	790.035.121	1
795.813 10a	Breakable coupling, Type A	790.512	1/0
795.813 10b	Breakable coupling, Type C	795.901	1/0

DATE: 07.07.14	SPAREPARTLIST Elevated LED 795.LED-MIRE.	
DRAWN: MBS		
APPROV:		
REPLACES:		
REPLACED BY:	TYPE 795.LED-MIRE	795.812

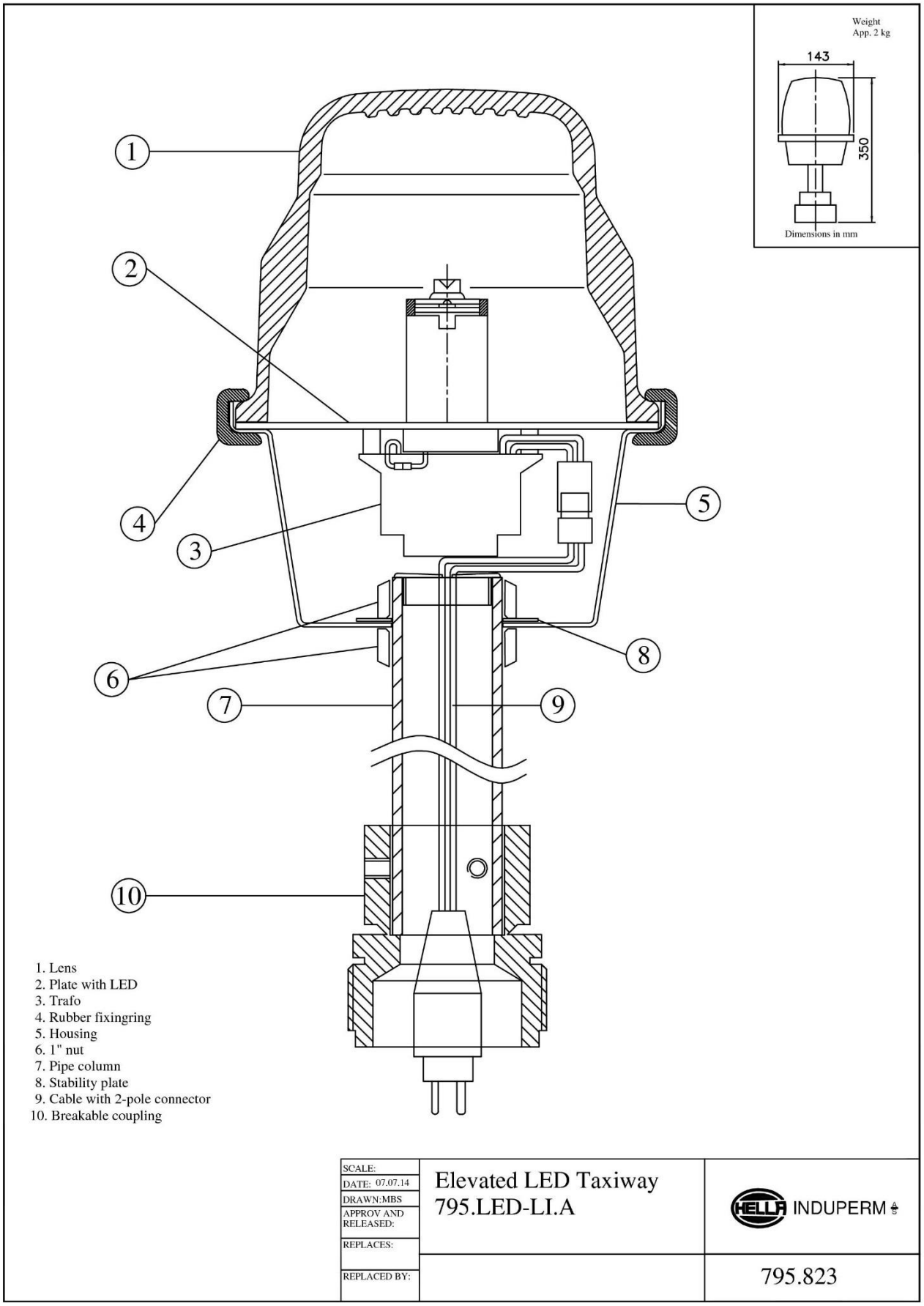
Weight
App. 2 kg
143
350
Dimensions in mm
1
2
3
4
5
6
7
8
9
10
1. Lens
2. Plate with LED
3. Trafo
4. Rubber fixingring
5. Housing
6. 1" nut
7. Pipe column
8. Stability plate
9. Cable with 2-pole connector
10. Breakable coupling
SCALE:
DATE: 07.07.14
DRAWN:MBS
APPROV AND RELEASED:
REPLACES:
REPLACED BY:
Elevated LED Taxiway
795.LED-LI.A
INDUPERM
795.823

ITEM See 795.823	DESCRIPTION	INDUPERM TYPE No.	No./UNIT
795.823 1a	Lens, Blue	P-382.002	1/0
795.823 1b	Lens, Clear	P-382.021	1/0
795.823 1c	Lens, Green	P-382.023	1/0
795.823 1d	Lens, Yellow	P-382.012	1/0
795.823 2	Plate with LED	824.530	1
795.823 3	Trafo	11.997	1
795.823 4	Rubber fixingring	790.041	1
795.823 5	Housing	795.011/1	1
795.823 6	1" nut	P-900.510	2
795.823 7	Pipe Column L=160mm	790.007.001	1/0
795.823 7	Pipe Column L=115mm	790.007.011	1/0
795.823 7	Pipe Column L=110mm (Standard)	790.007.021	1/0
795.823 7	Pipe Column L=145mm	790.007.031	1/0
795.823 7	Pipe Column L=200mm	790.007.041	1/0
795.823 7	Pipe Column L=68mm	790.007.051	1/0
795.823 8	Stability plate	795.710	1
795.823 9	Option: Cable with 2-pole FAA-connector	790.035.111	1
795.823 10a	Breakable coupling, Type A	790.512	1/0
795.823 10b	Breakable coupling, Type C	795.901	1/0

DATE: 07.07.14	SPAREPARTLIST Elevated LED 795.LED-LI.	
DRAWN: MBS		
APPROV:		
REPLACES:		
REPLACED BY:	TYPE 795.LED-LI	795.822

8. Certificates

Certificate

about

Conformity of the product

LED Taxiway Edge Light (Blue)

with the mentioned specifications of
International Civil Aviation Organization (ICAO)

Manufacturer:	Hella KGaA Hueck & Co. Rixbecker Strasse 75 59552 Lippstadt
Model description:	011.494-197 / 011.494-207
Version / Variant:	6,6 A
Brand name:	HELLA
Light source(s):	1 LED (blue)
Test standard/specification:	International Civil Aviation Organization (ICAO), Aerodromes, Annex 14, Volume 1, Fifth Edition, dated July 2009 Photometry – Chapter 5.3.17.7 and 5.3.17.8 Chromaticity – Figure A1-1 (blue)
Test laboratory:	TÜV Fahrzeug-Lichttechnik GmbH Rhinstrasse 46 12681 Berlin
Date of Test(s):	5 April 2013 - 11 April 2013
Test report number:	5356107/1

This is to certify that the mentioned product is in accordance with the mentioned test standard/specification at the time the tests were carried out in our laboratory.

Berlin, 12 April 2013

Dipl.-Ing. Fabian Stahl
Head of Laboratory

TÜV Fahrzeug-Lichttechnik GmbH
Rhinstrasse 46, 12681 Berlin, Germany

Note: This certificate is part of the full test report and should be read in conjunction with it.

www.tuv.com

TÜVRheinland®
Precisely Right.